IST 03 C 640 - 01

MAUI KR 115-280

INSTALLATION, USE AND MAINTENANCE

CE

fondital

BE INNOVATIVE

EN

Dear Customer,

We wish to thank you for choosing our condensing device, a technologically advanced and high quality product, which will ensure you high energy efficiency and very low emissions. Our environmentally friendly products will satisfy your comfort needs at very low operating costs.

Please read this manual with care before using the device, and always abide by the SAFETY WARNINGS AND STANDARDS.

Further, we would like to recommend to you to entrust specially qualified Technical Service personnel with the maintenance of the device, making sure that they use only original spare parts.

This manual represents an integral part of the device, and must therefore be kept carefully for further reference and/or for being supplied along with the device in case it is transferred to another Owner or User.

Best regards.

The Management

WARRANTY

MAUI devices have a SPECIFIC WARRANTY starting from the date of validation made by our Technical Service personnel.
The barcode labels contained in the document envelope are to be applied to the relevant certificates.

CONFORMITY

MAUI devices comply with:

- Gas Appliances Directive 2009/142/EC
- Efficiency rating according to 92/42/EC
- Low Voltage Directive 2006/95/EC
- Electromagnetic Compatibility Directive 2004/108/EC
- Energy Efficiency ☆☆☆☆
- "Condensate" Classification
- NOx 5 Class (< 70 mg/kWh)

Serial number and year of construction are given in the rating plate.

The Management

The device must be installed by qualified personnel and in compliance with the Technical Standards as well as with the national and local prevailing laws.
It is moreover mandatory to abide by the instructions for safety, installation, maintenance and use given in the manual.

TABLE OF CONTENTS

SAFETY WARNINGS AND STANDARDS

- After unpacking, make sure the supplied items are intact and complete. In case of non-compliances, contact the Dealer.
- The device must be installed by qualified personnel, in compliance with the national and local prevailing laws as well as with the instructions given in the manual supplied along with the device.
- The device must be used for its intended purposes. The manufacturer will not be held responsible for any damages to persons, animals or property resulting from incorrect installation, setting, maintenance or use of the device.
- In case of water leakage, disconnect the device from the electric power supply, close the water supply and immediately contact the Technical Service or qualified personnel.
- Check at regular intervals that the working pressure of the hydraulic system, when not heated, is about 1.5 bar. In case the pressure value is different, contact the Technical Service or qualified personnel.
- In case the device is idle for a long time, carry out at least one of the following operations:
  - Turn the device main switch and the system main switch to OFF.
  - Close the gas supply cock and the water filler cock of the hydraulic system.
- The manual represents an integral part of the device and shall therefore ALWAYS accompany it even in case it is sold to another Owner or User or if it is transferred into another system. The manual must be kept with care. In case it gets damaged or lost, please request the Technical Service to provide you with a copy.
- **It is recommended to service the device at least once a year.**

PROHIBITIONS

- **IT IS FORBIDDEN** to let children or unassisted disabled people carry out the setting of the device.
- **IT IS FORBIDDEN** to operate electrical devices or equipment, such as switches, telephones, household appliances, etc. if you smell gas or unburnt gases. If this happens, proceed as follows:
  - Open doors and windows to aerate the room.
  - Close the gas shut-off cock.
  - Immediately contact the Technical Service or qualified personnel.
- **IT IS FORBIDDEN** to touch the device if you are barefoot or if parts of your body are wet.
- **IT IS FORBIDDEN** to carry out any technical or cleaning operations before disconnecting the electric power supply from the device by turning both system and device main switches to OFF.
- **IT IS FORBIDDEN** to alter the safety and setting equipment without the prior manufacturer's authorization and instructions.
- **IT IS FORBIDDEN** to pull, tear or twist the electric cables coming out of the device even if they are disconnected from the power supply.
- **IT IS FORBIDDEN** to close or reduce the size of the aeration openings (if any) of the installation room or of the device . The aeration openings are essential for a correct combustion.
- **IT IS FORBIDDEN** to close the condensate drain.
- **IT IS FORBIDDEN** to leave containers with flammable substances in the room where the device is installed.
- **IT IS FORBIDDEN** to dispose of the packaging in the environment as it is potentially dangerous. The packaging must be disposed of according to the provisions of the prevailing laws.

DESCRIPTION

MAUI KR 115-280 aluminium thermal units are heat condensing generators, designed for room heating, and, if combined with a storage-type water heater, also for the production of domestic hot water.
They are made up of:
- an aluminium body having a low water content and a high exchange surface to maximize energy efficiency and heat output;
- a stainless steel and fully pre-mixed micro-flame burner, allowing high modulation ratios, combustion stability and low emissions (NOx Class = 5);
- a variable-speed fan needed for air/gas modulation and mixing;
- a combustion circuit, either of "C-type" (sealed) or of "B-type" (open), depending on the environment where the device is installed and on the flue gas vent configuration selected upon installation;
- an electronic control unit, which, if combined with an external probe, allows setting the flow temperature depending on the external temperature. In this way, the device delivers solely the heat actually needed, avoiding any waste of energy. The device features a self-diagnostic function with display of the error codes and of the parameters operating at the moment the fault occurred, to assist the work of the Technical Service.

Moreover, during prolonged periods of non-use or holiday, the device is always protected by the Antifreeze Function, which is automatically activated if the flow temperature drops below 5°C, and is deactivated when it rises above 15°C. Of course during those periods the device's gas and power supplies must be on.
When designing the device, specific solutions were implemented to:
- achieve constant and optimal air/gas mixing;
- reduce heat losses;
- reduce noise level.

MAUI KR 115-280 thermal units are preset for connection to 0-10 V DC controls and for cascade-type operation of up to 6 units. They can be fitted with different system accessories, as for instance, a mixing bottle or a water circuit breaker, an ISPESL unit assisting the installation personnel and complying with the Law requirements.

DEVICES

MAUI KR 115-280 devices are fitted with the following safety, check and setting equipment:

- Probe located on the device body that ensures its thermal safety in case the detected temperature rises above the maximum allowed value. Manual reset from device keypad.
- A water pressure sensor which is triggered when hydraulic circuit pressure falls below 1.2 bar.
- A condensate pressure switch which is triggered when the flue gas pressure in the condensate collection tank exceeds 5 mbar.
- A flue gas safety probe which is triggered when the flue gas temperature is too high.
- A gas pressure switch which is triggered when the supply gas pressure is below 14 mbar.
- Hydraulic circuit diagnostics to protect the thermal unit from:
  - overtemperatures, checking the temperature difference between flow and return (ΔT);
  - from inadequate water circulation inside the body, checking the temperature difference between the probe on the body and the flow probe.

WARNING

- The triggering of the safety equipment signals a potentially dangerous malfunction of the device. If this happens, please contact the Technical Service immediately.

IDENTIFICATION

The device is identified through:
- the **Rating Plate** applied to the casing.

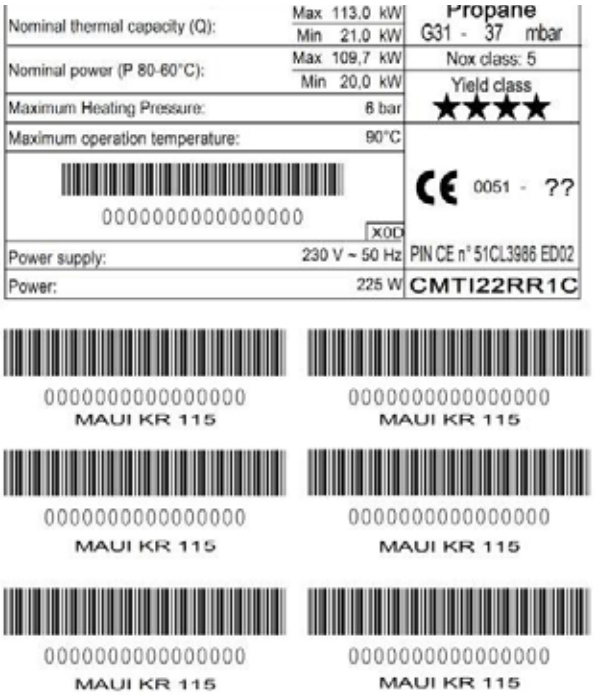

WARNING

- Tampered, removed or missing rating plate - or any other event preventing a clear identification of the product - will make any installation and/or maintenance work extremely difficult.

STRUCTURE OF MAIN COMPONENTS

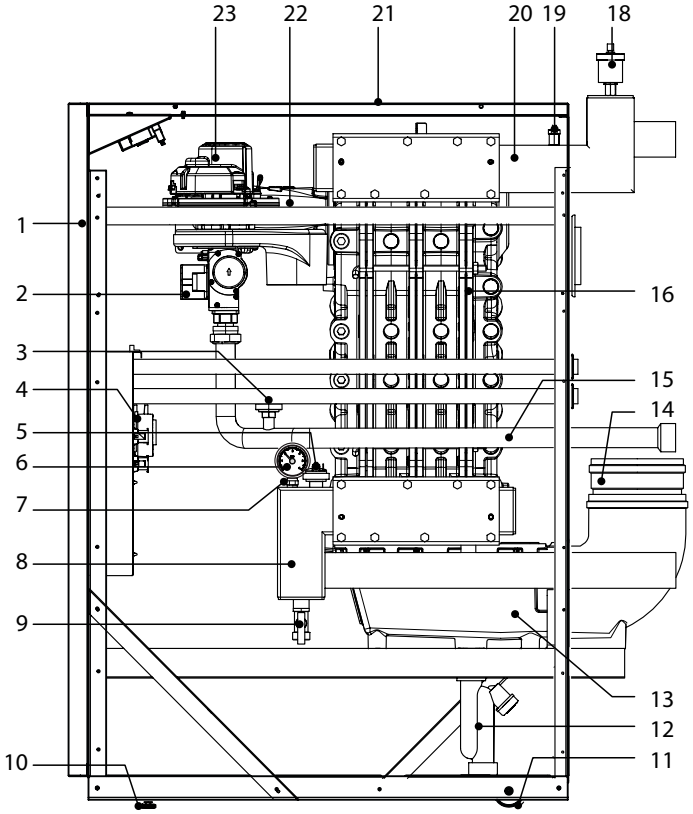

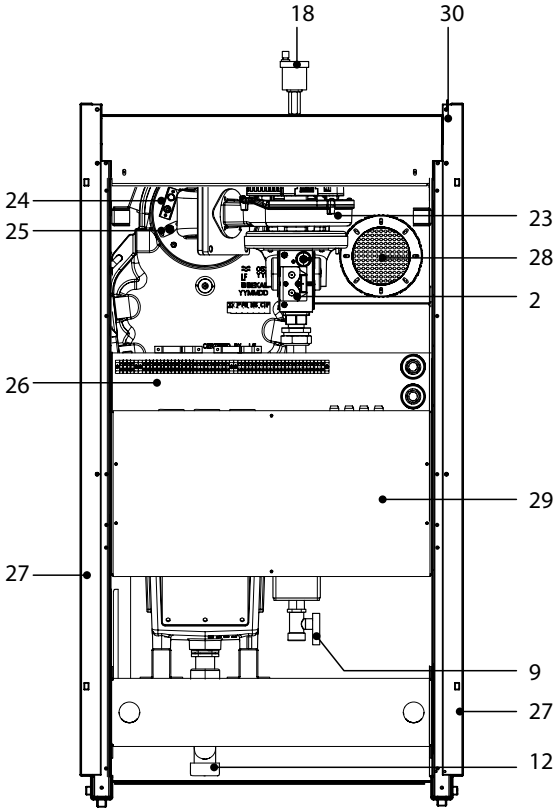

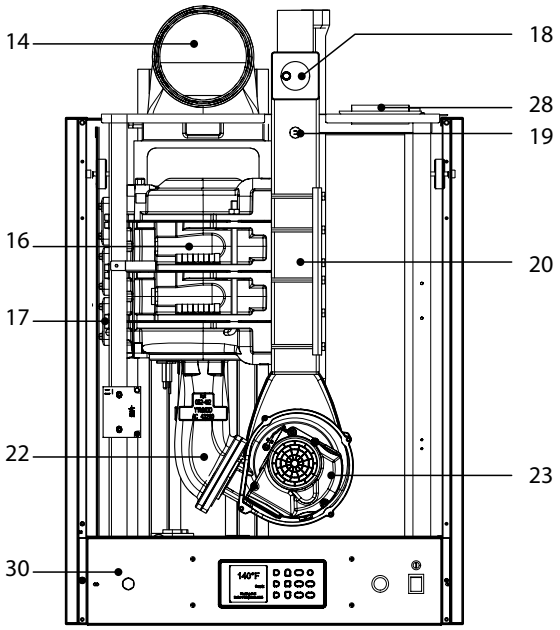

1 Front panel
2 Gas valve
3 Gas pressure switch
4 Trap pressure switch
5 Water pressure sensor
6 Pressure gauge
7 Return probe
8 System return collector
9 Boiler discharge cock
10 Supporting feet
11 Castor
12 Condensate trap
13 Condensate collection tank
14 Flue gas vent connection
15 Gas supply pipe
16 Boiler body
17 Inspection and cleaning doors
18 Automatic bleed valve
19 Flow probe
20 System flow collector
21 Top panel
22 Burner
23 Fan
24 Ignition electrodes
25 Flame detection electrode
26 Electrical connection terminal box
27 Side panels
28 Combustion air intake
29 Boiler board container
30 Control panel

TECHNICAL SPECIFICATIONS

DESCRIPTION		MAUI					
		115	150	200	240	280	
Fuel		G20 (20 mbar) - G31 (37 mbar)					
Country/ies of destination		*please refer to the boiler technical label*					
Device category		*please refer to the boiler technical label*					
Type of device		B23, B33, C43, C53, C63, C83					
Max nominal heat output (Qn)		113.0	150.0	200.0	235.0	275.0	kW
Min heat output (Qmin)		21.0	30.0	35.5	42.5	49.5	kW
Nominal heat output (80°-60°) (Pn)		109.7	146.7	196.0	229.8	269.2	kW
Nominal heat output (50°-30°)		116.1	156.2	207.8	243.9	285.5	kW
Minimum heat output (80°-60°) (Pmin)		20.0	29.0	34.7	41.5	48.3	kW
EFFICIENCY							
Useful efficiency at max. Pn (80°-60°)		97.1	97.8	98.0	97.8	97.9	%
Useful efficiency at min. Pn (80°-60°)		95.0	96.5	97.7	97.6	97.5	%
Useful efficiency at max. Pn (50°-30°)		102.7	104.1	103.9	103.8	103.8	%
Useful efficiency at 30% (30° return)		107.6	107.5	107.5	107.5	107.5	%
Max. gas consumption	G20	11.96	15.87	21.16	24.87	29.10	m³/h
	G31	8.78	11.66	15.54	18.26	21.37	kg/h
Min. gas consumption	G20	2.22	3.17	3.76	4.50	5.24	m³/h
	G31	1.63	2.33	2.76	3.30	3.85	kg/h
EMISSIONS							
Max. flue gas temperature (80°-60°)		65 - 70					°C
Min. flue gas temperature (80°-60°)		60 - 65					°C
Max./min. flue gas temperature (50°-30°)		40 - 45					°C
Flow gas mass flow at Qn (80°-60°)		49.1	64.6	86.1	99.5	110.8	g/s
Flow gas mass flow at Qmin (80°-60°)		9.8	16.1	16.3	19.1	21.5	g/s
Max. condensate production		15	19	25	30	36	l/h
CO2 max/min (G20) (average values)		9.3/9.1					%
CO2 max/min (G31) (average values)		10.6/10.3					%
CO		25	30	35	20	28	ppm
NOx		15	20	18	18	18	ppm
NOx Class		5					-
ELECTRICAL DATA							
Power absorption		225	260	320	320	320	W
Input voltage		220/240 ~ 50/60					Volt ~ Hz
Protection degree		X0D					IP
BOILER							
Max. CH pressure		6					bar
Maximum working temperature		90					C°
CH water content		15.3	18.0	22.9	25.6	28.4	l
Flow resistance water side - nom. ΔT (20°C)		80	80	90	90	100	mbar
Max. flow/return ΔT		35					°C
Nom. ΔT water flow rate (20°C)		4.86	6.45	8.60	10.11	11.83	m³/h
Water flow rate ΔT (10°C)		9.72	12.90	17.20	20.21	23.65	m³/h
FLUE GAS VENT							
Flue fitting		150	150	200	200	200	Ø
Air fitting		100					Ø
Total available head (flue gas outlet + air intake)		320	233	100	180	85	Pa
FAN							
Rpm ÷ Max	G20	1665 ÷ 7400	1650 ÷ 6250	1230 ÷ 5600	1320 ÷ 5800	1300 ÷ 5800	rpm
Frequency Min ÷ Max		55.5 ÷ 246.7	55 ÷ 208.3	61.5 ÷ 280	66 ÷ 290	65 ÷ 290	Hz
Rpm ÷ Max	G31	1665 ÷ 7400	1650 ÷ 6250	1230 ÷ 5600	1320 ÷ 5800	1300 ÷ 5800	rpm
Frequency Min ÷ Max		55.5 ÷ 246.7	55 ÷ 208.3	61.5 ÷ 280	66 ÷ 290	65 ÷ 290	Hz
DIMENSIONS and WEIGHTS							
Width		640					mm
Depth (flue included)		1115	1115	1335	1335	1335	mm
Height		1200					mm
Weight		180	190	240	257	274	Kg

HYDRAULIC CIRCUIT - PROBES

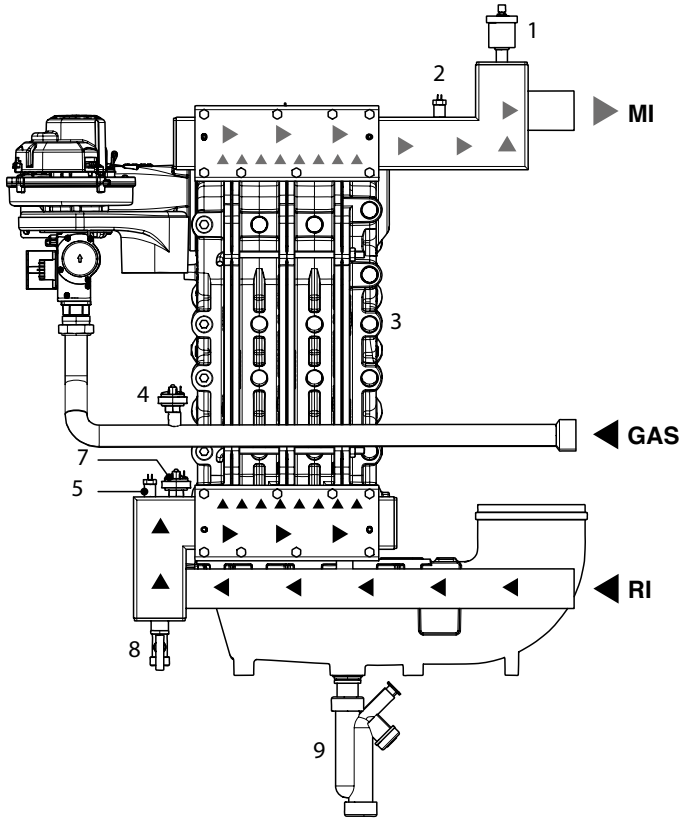

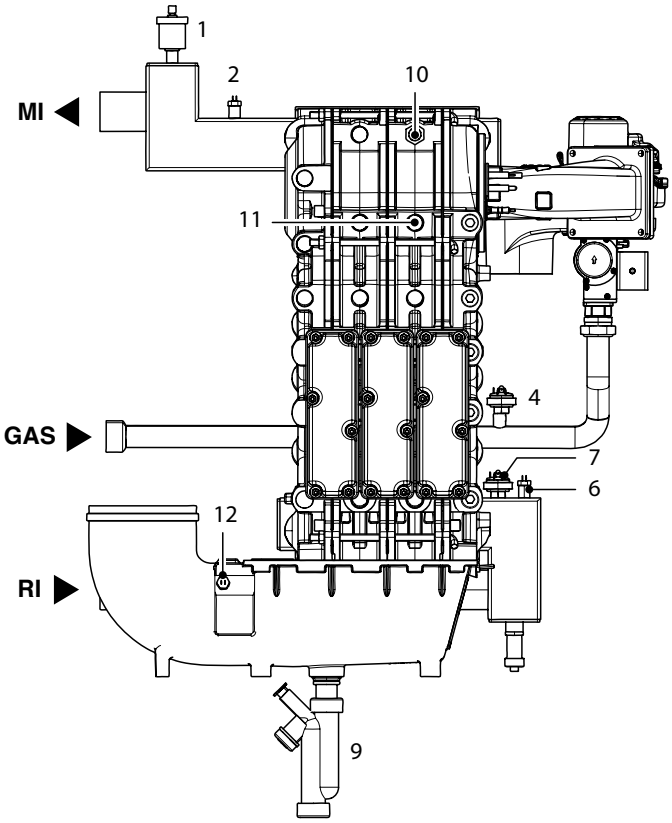

1 Automatic bleed valve
2 Flow probe
3 Boiler body
4 Gas pressure switch
5 Pressure gauge connection
6 Return probe
7 Water pressure sensor
8 Boiler discharge cock
9 Condensate trap
10 Boiler body probe
11 Safety thermostat
12 Flue gas vent probe

SYSTEM PUMP

Choose a pump suitable for the hydraulic resistance of the thermal unit and the system.
The diagram shows the curves of the thermal unit flow resistance.

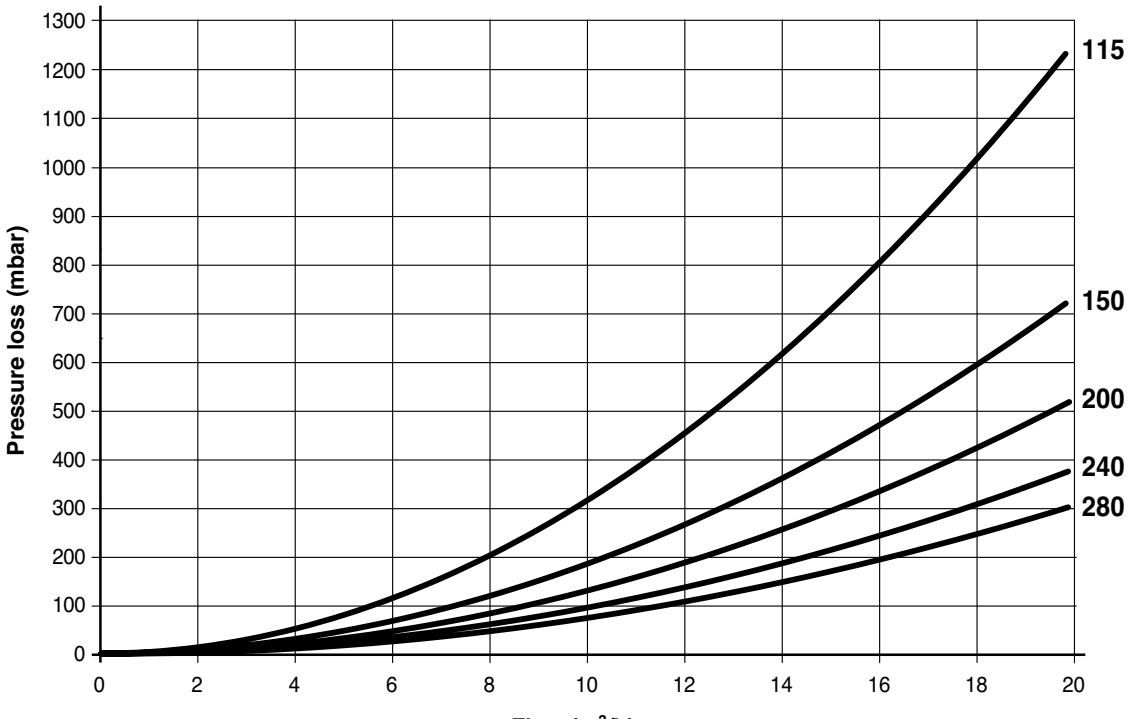

It is recommended to strictly comply with the flow rates given in the table and with the instructions below.

DESCRIPTION	MAUI KR 115-280					
	115	150	200	240	280	
Water flow rate ΔT 20	4.72	6.30	8.42	9.88	11.57	m^3/h
Water flow rate ΔT 15	7.08	9.45	12.63	14.82	17.36	m^3/h

⚠ WARNINGS

- Failure to comply with the water flow rates given in the table may result in malfunctioning of the device.
- Upon commissioning the device, it is recommended to check the rotation of the pump shaft.
- IT IS FORBIDDEN to operate the pumps without water.
- The absorption of the selected pumps must suit the fuse installed in the electric panel (6.3A).

CONTROL PANEL

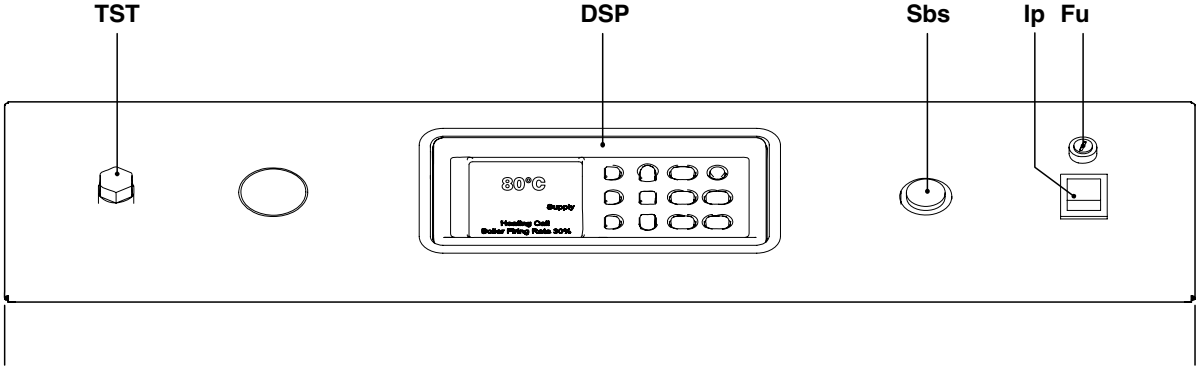

Sbs Warning light - shutdown due to activation of safety devices
DSP User interface with display
Ip Main switch with light signalling
Fu Main fuse (10A)
TST Manual reset safety thermostat

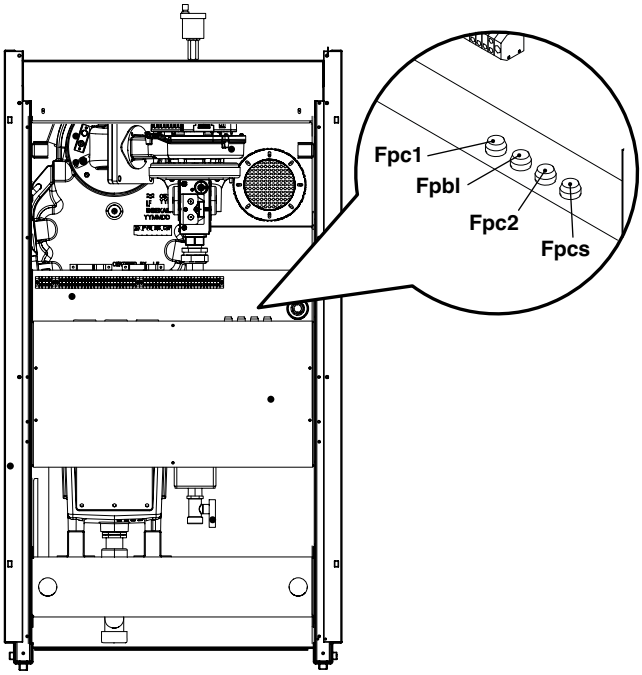

Fpc1 Primary pump fuse 1 (6.3A)
Fpbl Water heater pump fuse (6.3A)
Fpc2 Primary pump fuse 2 (6.3A)
Fpcs Cascade pump fuse (6.3A)

DSP

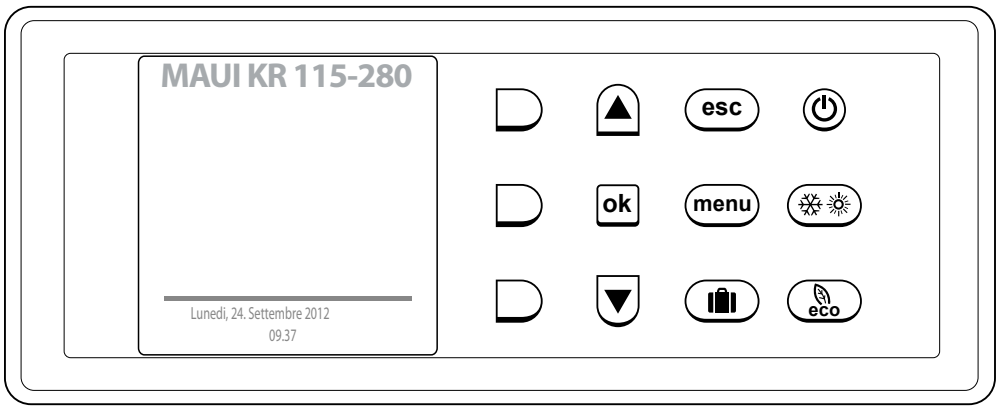

DISPLAY SYMBOL DESCRIPTION

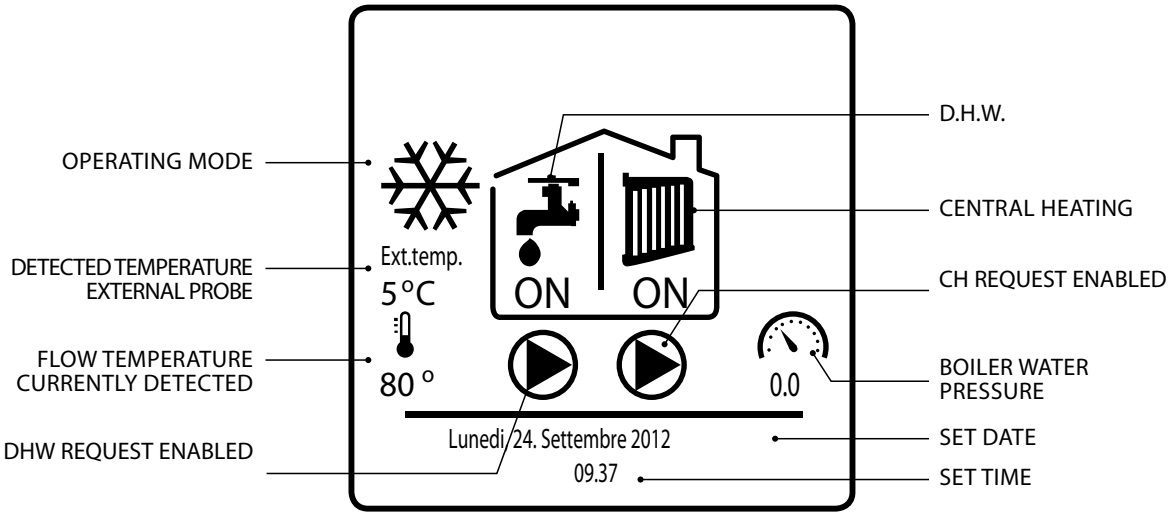

START SCREEN

Key	Function description	Display
⏻	**ON/STAND-BY** **STAND-BY:** Stops the device, blocking the device keys. **ON:** Starts the device, unblocking the device keys.	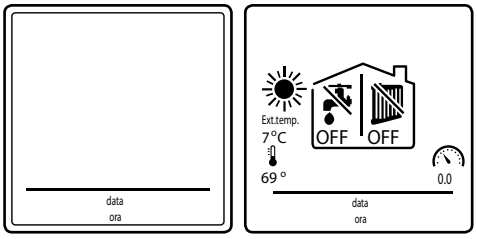

Key	Function description	Display
	OPERATING MODE **SUMMER:** DHW production only **WINTER:** CH only or CH and DHW **NONE:** neither CH, nor DHW. Antifreeze or "Manual test" function active	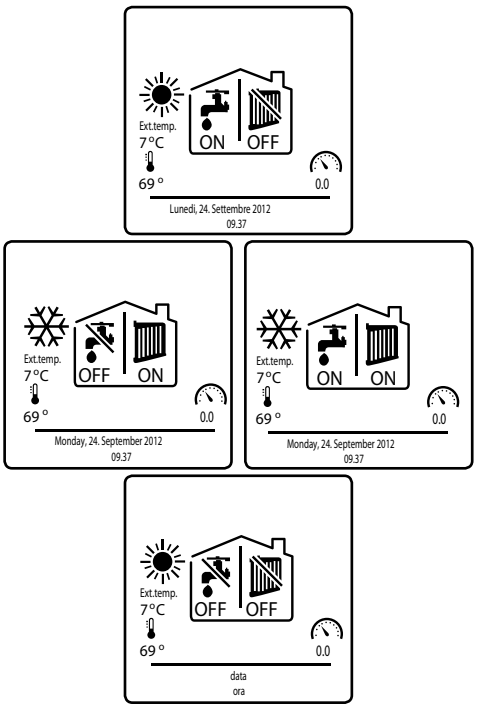
eco	**ECO - Manual** Reduces by a set value the DHW and CH water delivery temperature (reduced operation)	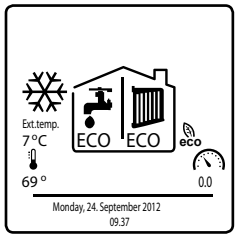
esc	**ESC** Interrupts the current activity and returns to the start screen	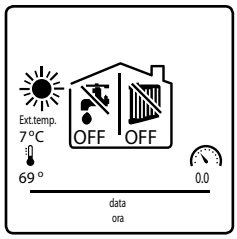
menu	**MENU** Displays the menu selection page (USER or ENGINEER)	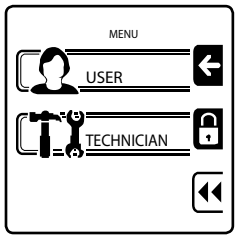

Key	Function description	Display
	HOLIDAY Sets the holiday start and end dates and the DHW and CH water delivery temperature values for this interval	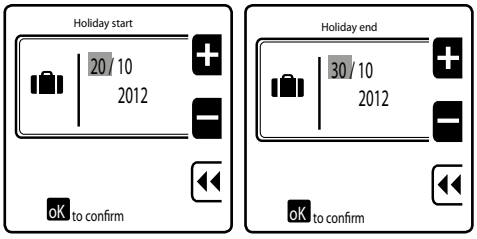
	UP Scrolls up screen lines **DOWN** Scrolls down screen lines Hold the keys for fast scrolling.	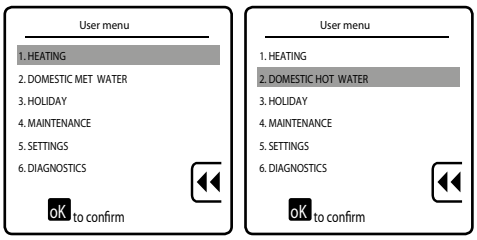
	OK Allows: - accessing the selected menu or sub-menu line - confirming the new value that was entered	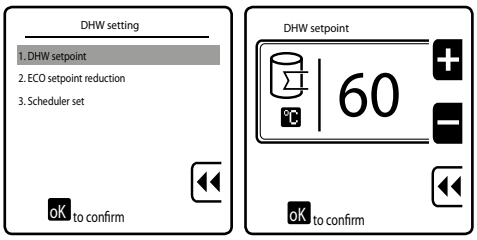
	RED (top) Allows: - accessing the USER menu - increasing the value to be edited Hold the key for fast scrolling.	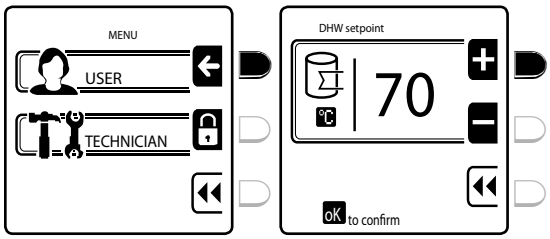
	RED (middle) Allows: - accessing the Technical menu - decreasing the value to be edited Hold the key for fast scrolling.	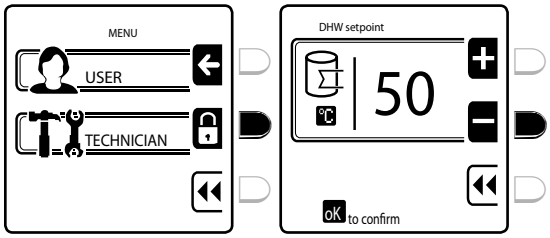
	RED (bottom) Returns to the selected line without saving/storing the edited value.	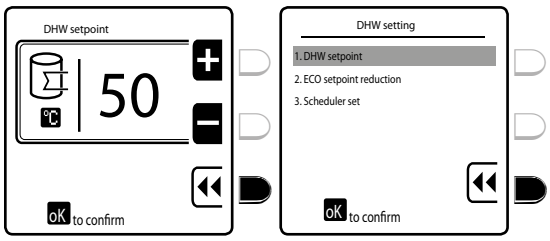

WIRING DIAGRAM

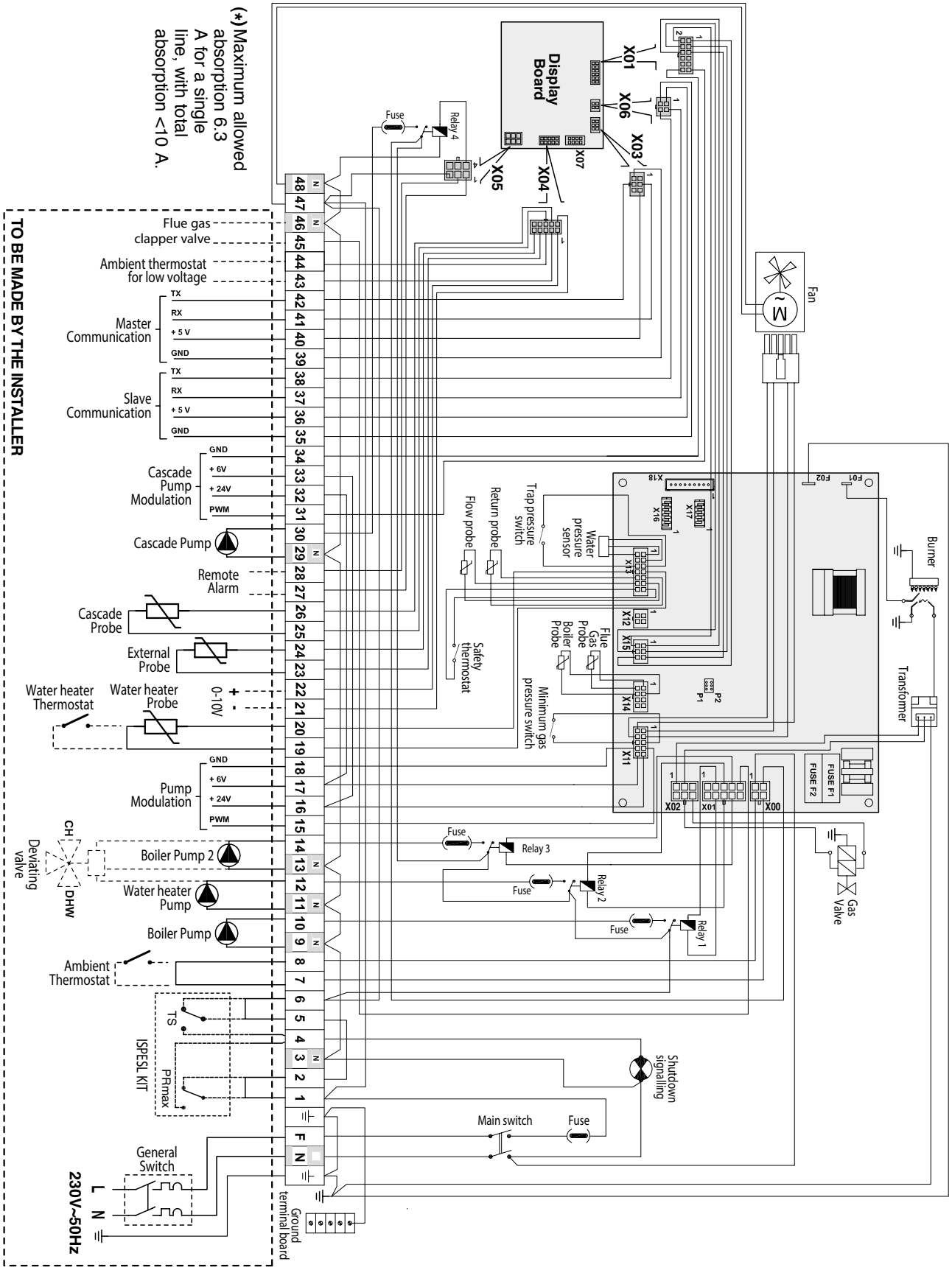

UPON RECEIVING THE PRODUCT

MAUI devices are delivered in a single package placed on a wooden pallet and protected by cardboard and a wooden cage.

In the plastic envelope (A) inside the packing you will find:

- the installation, use and maintenance manual
- the certificate of guarantee with the barcode labels
- the hydraulic test certificate
- the spare part catalogue

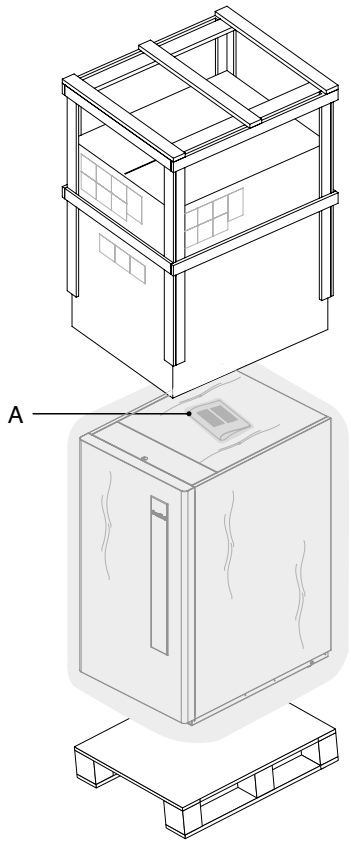

⚠ WARNINGS

- Always use suitable equipment and accident-prevention protections when unpacking and handling the device.
- The manual represents an integral part of the device and it is advisable to read it carefully before installing and commissioning the device. Moreover, it must be kept carefully for further reference and/or in case the system is transferred to another Owner or User.

DIMENSIONS AND WEIGHT

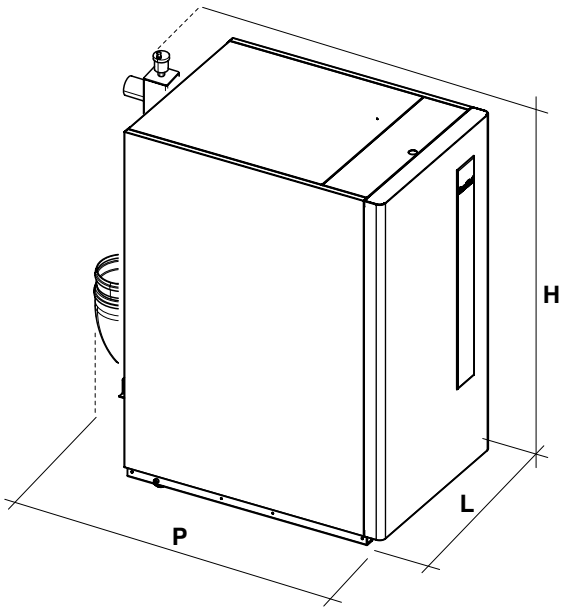

Dimensions and Weights	MAUI KR 115-280					
	115	150	200	240	280	
L	640					mm
P	1115	1115	1335	1335	1335	mm
H	1200					mm
Net weight	180	190	240	257	274	Kg

HANDLING

After unpacking the device, handle it as described below:
- Remove the front panel (1) to ease the seizing and handling operations.
- Insert two 1" pipes (2) in the specific holes or slide the fork-lift under (3) the packed device.
- Lift and handle the device.

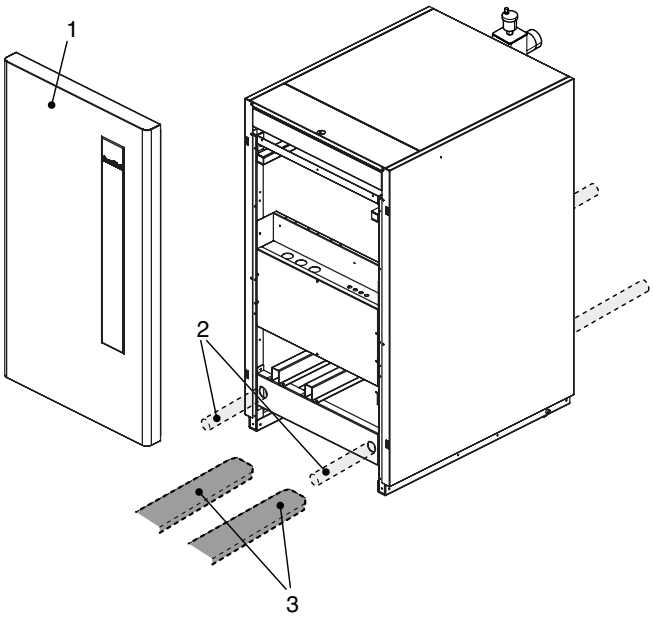

⚠ WARNINGS

- ALWAYS use accident-prevention protections.
- In case of manual handling, do not exceed the maximum weight lifted per person.

INSTALLATION

INSTALLATION ROOM

The installation room must always comply with the Technical Rules and the prevailing Laws. It must feature suitably sized aeration openings.

CLEAR ZONES (AS AN INDICATION)

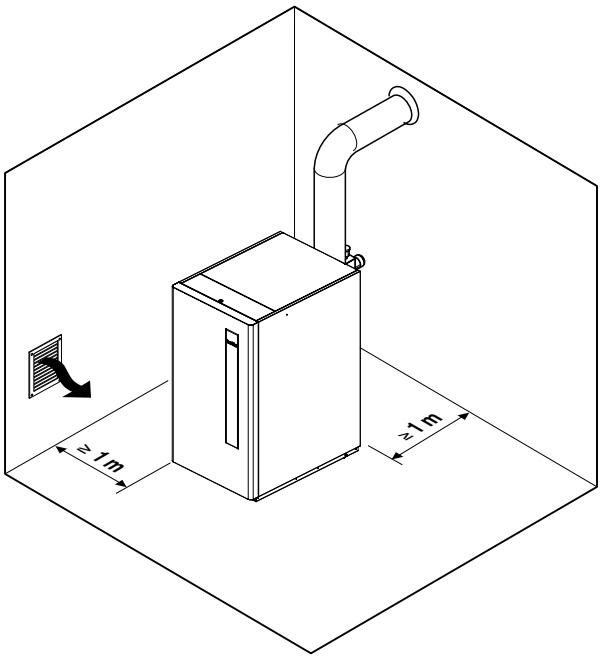

⚠ WARNINGS

- Take into due consideration the space needed to access the safety/setting devices and to carry out maintenance operations.
- **IT IS FORBIDDEN** to install the **MAUI KR 115-280** devices outdoors unless they are suitably protected against weather agents.

NEW INSTALLATION OR REPLACEMENT OF ANOTHER DEVICE

Follow these instructions when installing the device on old systems or systems to be updated:
- In case you are using an existing flue pipe, make sure that it is suitable for the new condensing device, that it has been calculated and manufactured in compliance with the Standards, that it is as straight as possible, sealed, insulated and that it has no obstructions or narrowings.
- The flue pipe must be fitted with a connection for draining the condensate.
- The electric system must comply with the specific Standards and must be carried out by qualified personnel.
- The gas supply line and the tank (if available) must comply with the specific Standards and fitted with a gas meter.
- Make sure that the expansion tank is capable of absorbing completely the expansion of the fluid contained in the system.
- Make sure the system has been washed and cleaned from sludge and fouling, and check the hydraulic sealing.
- Check for the presence of a system for treating the supply and make-up water, as described in the following section.
- **Make sure that efficient systems for removing air and impurities up to 5 µm are implemented (for example: Y-shaped filters, micro impurity and micro air bubble separators).**
- If an automatic filling system is fitted, install a litre meter to determine the correct amount of any possible leakage.
- Do not drain the water from the system during routine maintenance, even if the amount of drained water seems to be insignificant. For instance, install suitable cut-off valves to clean the filters.

(*) The manufacturer will not be held responsible for any damages resulting from a wrong execution of the flue gas vent or from continuous water make-ups in the thermal unit.

WATER TREATMENT

Before installing the device, make sure to clean piping and heating bodies thoroughly.

CHARACTERISTICS OF THE WATER USED FOR FILLING THE SYSTEM
Fill the system with water having the following characteristics:

pH :	from 6.5 to 8.5 (presence of aluminium)
Ca^{+++} Mg^{++} :	less than 0.5°f
OH^{-} + 1/2 $Ca3^{-}$:	from 5 to 15°f
P_2O_5 :	from 10 to 30 mg/l
Na_2SO_3 :	from 20 to 50 mg/l

If the system water is in contact with aluminium, its pH must be lower than 8.5.
If the analysis of a sample of the water which is to be used for filling the system evidences that its values do not lie within the given ranges, the use of an inhibitor is required. This is necessary to prevent limescale build-up, which could compromise the boiler's correct operation.
An inhibitor against proliferation of bacteria must be used in systems operating at low temperatures.

For water treatment in domestic heating systems, refer to UNI 8065 standard of 1989.

WARRANTY DOES NOT COVER OPERATIONS AND REPLACEMENT OF PARTS RESULTING FROM LIMESCALE BUILD-UP.

WARNING: both on new systems and in case of replacements, make sure that efficient systems for removing air and impurities up to 5 µm are implemented (for example: Y-shaped filters, micro impurity and micro air bubble separators).

⚠ WARNINGS

- IT IS FORBIDDEN to soften the water according to the principle of ion exchange.
- Never fill the system with distilled or demineralized water as it will severely corrode the aluminium heat exchanger. Use softened water for filling and top-ups to reduce the total hardness. Moreover, the water must be conditioned to keep the pH within the defined range in order to prevent corrosion.
- Keep a log of the amount of filling and top-up water, of the water quality checks and of the water treatment checks.
- Install a meter to check the amount of filling and top-up water.
- The conductivity of the untreated water in the system MUST NOT exceed 600 µs/cm.
- In case the system water is treated, please abide by the instructions given by the manufacturer of the product used. Conductivity MUST NOT exceed 2000 µs/cm.
- **After replacing the generator, a complete clean up of the system is COMPULSORY.**

NOTE: In case the conductivity exceeds the values given above, empty out the system, rinse and fill it with clean and treated cock water.

HYDRAULIC CONNECTIONS

The characteristics of the hydraulic connections of the thermal unit are given below.

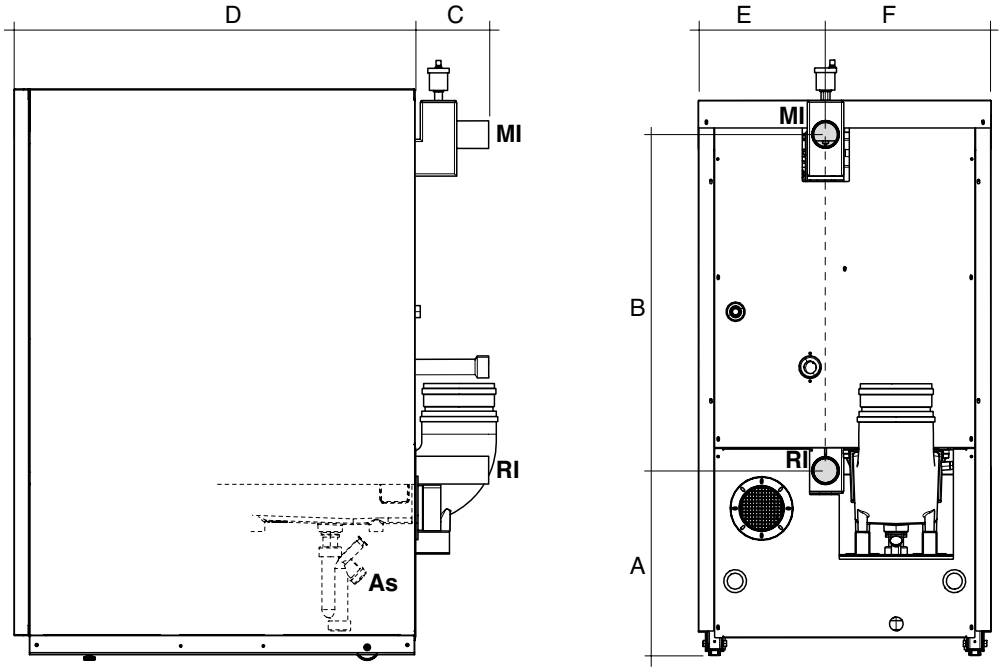

Description	MAUI KR 115-280					
	115	150	200	240	280	
MI System flow	2" M					Ø
RI System return	2" M					Ø
As Trap connection	25					mm
A	400					mm
B	728					mm
C	175	175	245	245	245	mm
D	848	848	1088	1088	1088	mm
AND	279					mm
F	363					mm

BLOCK DIAGRAMS

Example 1:
CH only systems

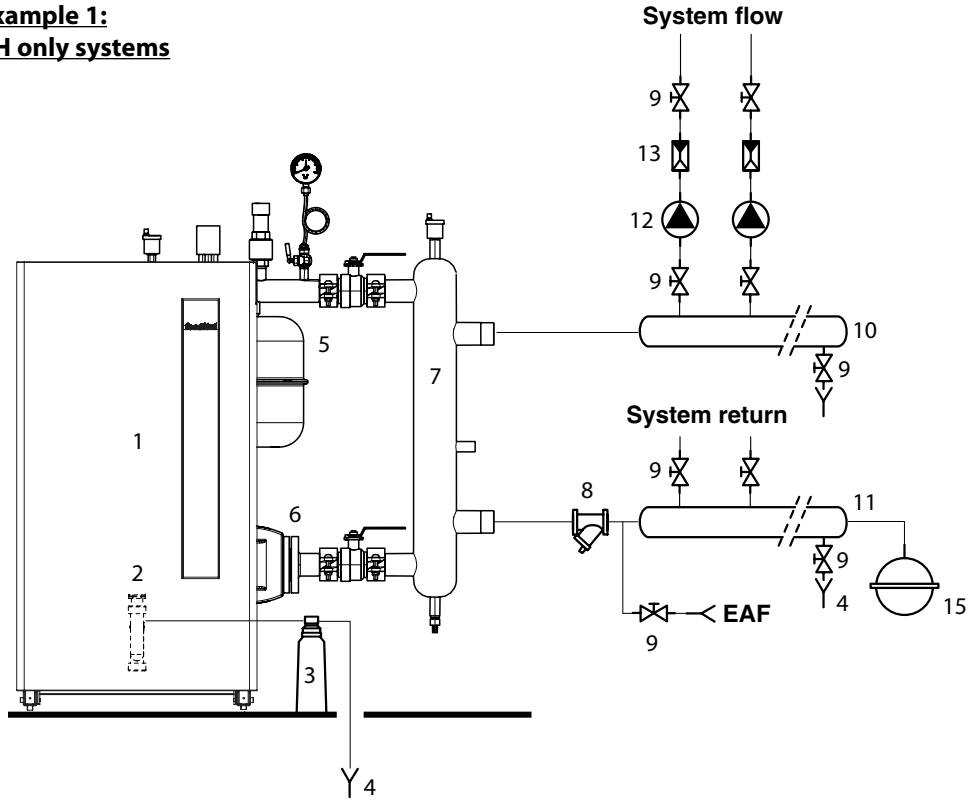

Example 2:
System used for heating and for the production of DHW with water heater downstream the hydraulic separator

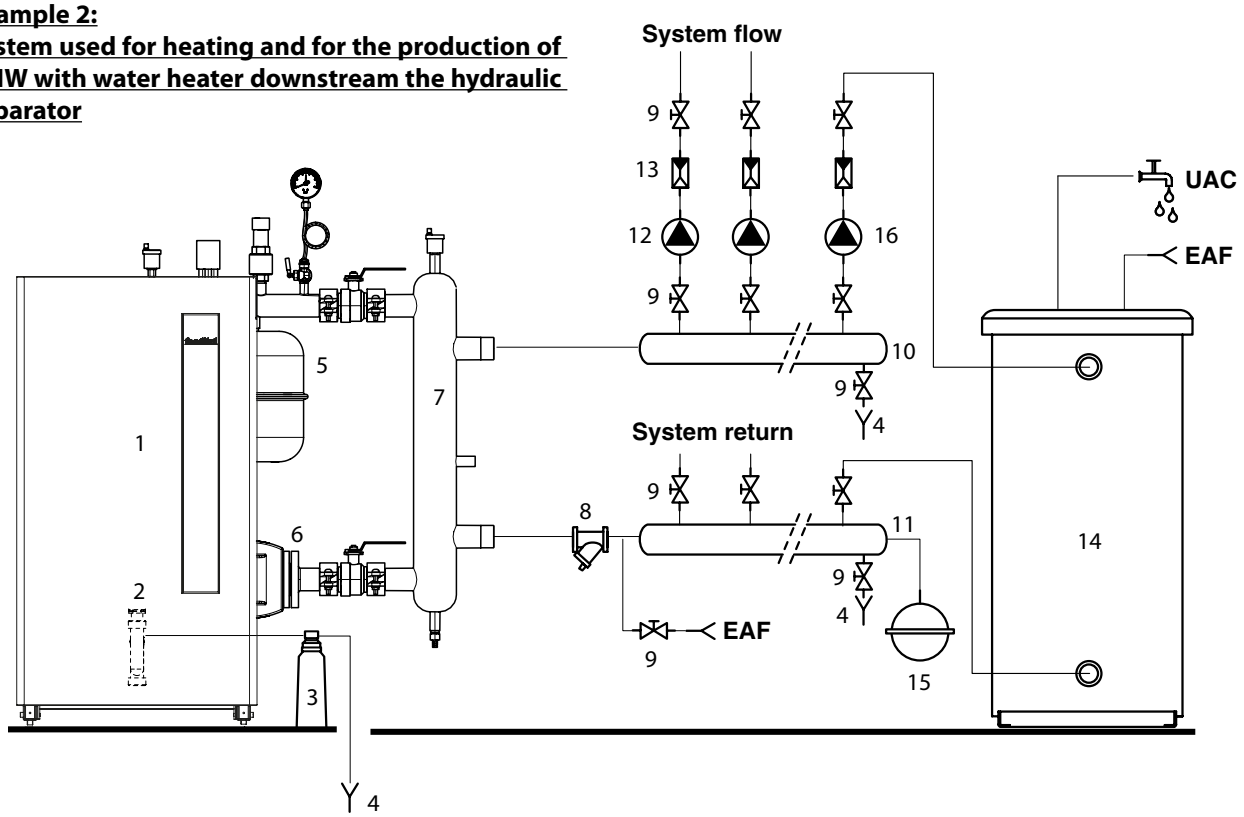

WARNINGS

- In case DHW is produced by the water heater pump located on the flow collector, use boiler pump 2 as the system's pump (without mix valve).
  This allows controlling the operation of these two pumps with priority or in parallel, to prevent the temperature in the CH circuit from rising.

Example 3:
System used for heating and for the production of DHW with water heater upstream the hydraulic separator

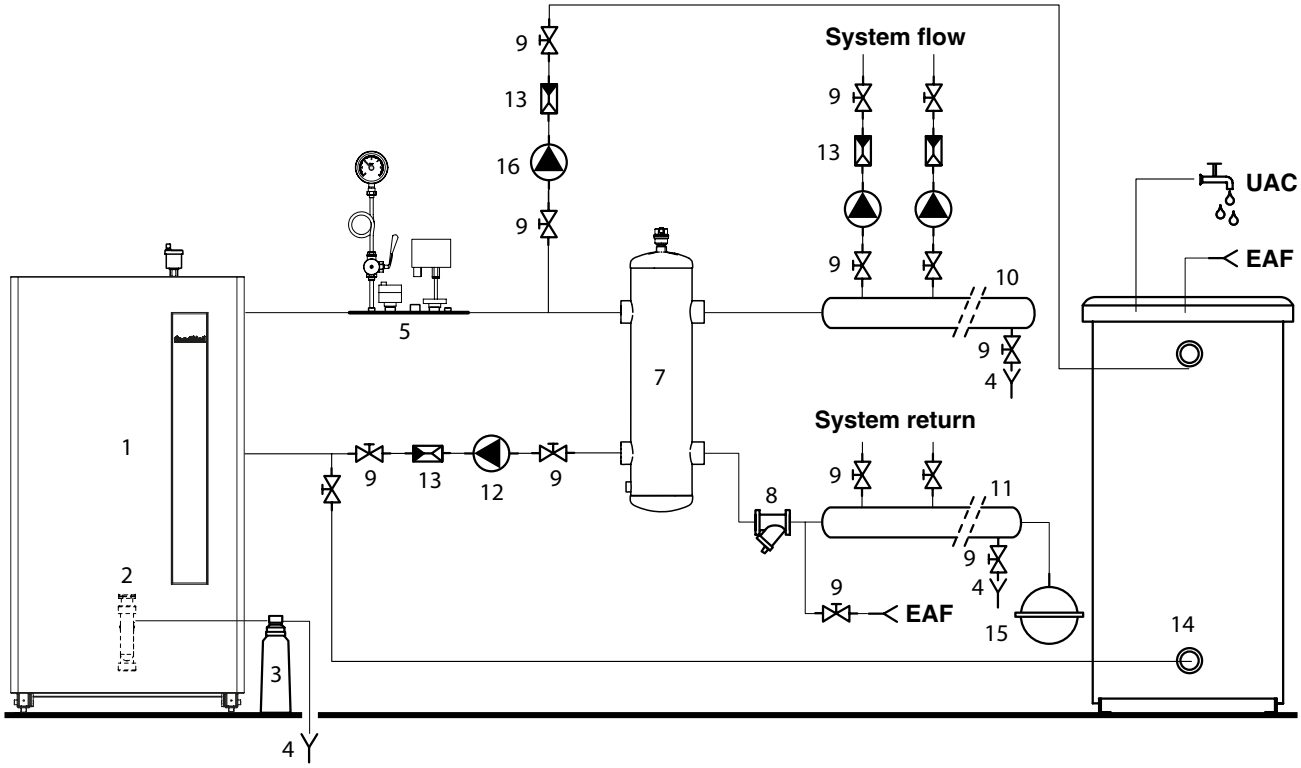

1	Thermal unit	**7**	Hydraulic separator	**13**	Non-return valve
2	Condensate trap	**8**	Decanting filter	**14**	Remote water heater
3	Condensate neutraliser	**9**	Shut-off cock	**15**	Expansion tank
4	Vent	**10**	Flow collector	**16**	Water heater pump
5	ISPESL safety module	**11**	Return collector		
6	Primary pump	**12**	System pump	**EAF**	Cold water inlet
				UAC	DHW users

WARNINGS

- Fill the condensate trap (2) and convey the condensate drain pipe in a proper way. Make sure that proper condensate treatment systems are put in place.
- The safety valve drain must be connected to a disposal system. The manufacturer will not be held responsible for any flooding due to the triggering of the safety valve.
- It is mandatory to install backflow preventing devices in systems filled with freeze protection products.
- The selection and installation of the system components are under the responsibility of the installation technician, who shall comply with the prevailing Laws and with the good practice rules.
- The expansion tank must be capable of completely absorbing the expansion of the fluid contained in the system.

ELECTRICAL CONNECTIONS

MAUI devices must be connected as described below. The connections must be carried out by the installation technician or by qualified personnel.

To access the terminal box (MC):
- Remove the front panel (1).
- Insert the cables in the specific tearproof cable glands (2) located on the terminal box (MC) and run them through the pipe (3) placed inside the casing.

Upon completing the connections, refit the front panel (1).

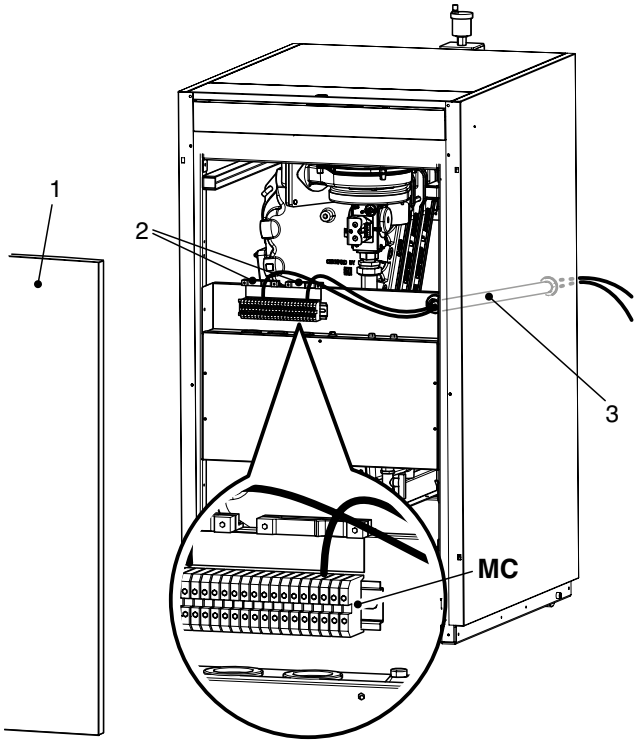

CONNECTIONS FOR OPERATION IN CH ONLY MODE (example no. 1 on page 20)

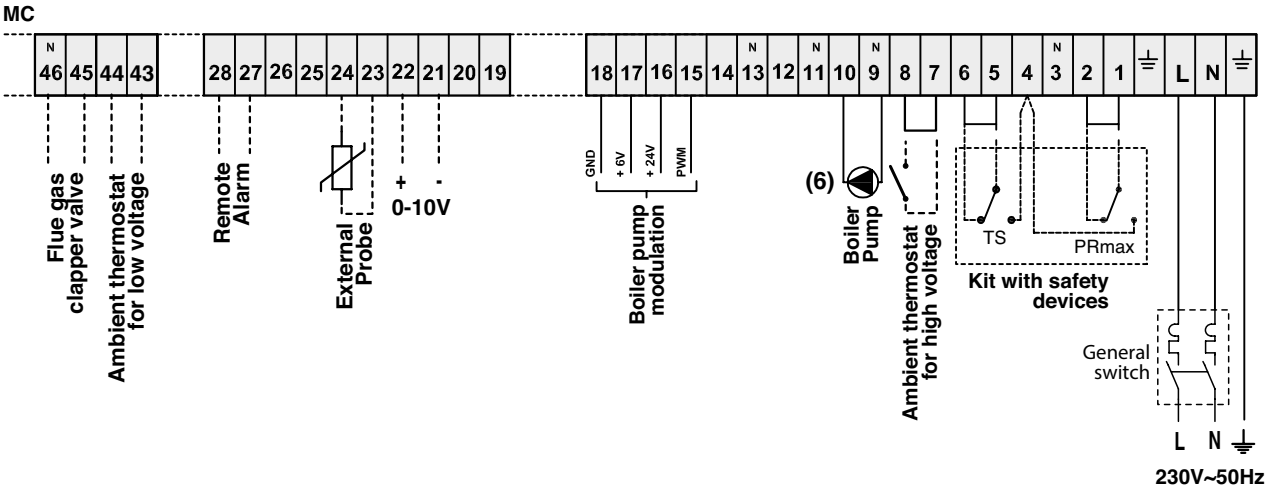

- - - - optional connections

CONNECTIONS FOR OPERATION IN CH AND DHW PRODUCTION MODE WITH WATER HEATER PUMP AND BOILER PUMP 2 (SYSTEM PUMP)(example no. 2 on page 20)

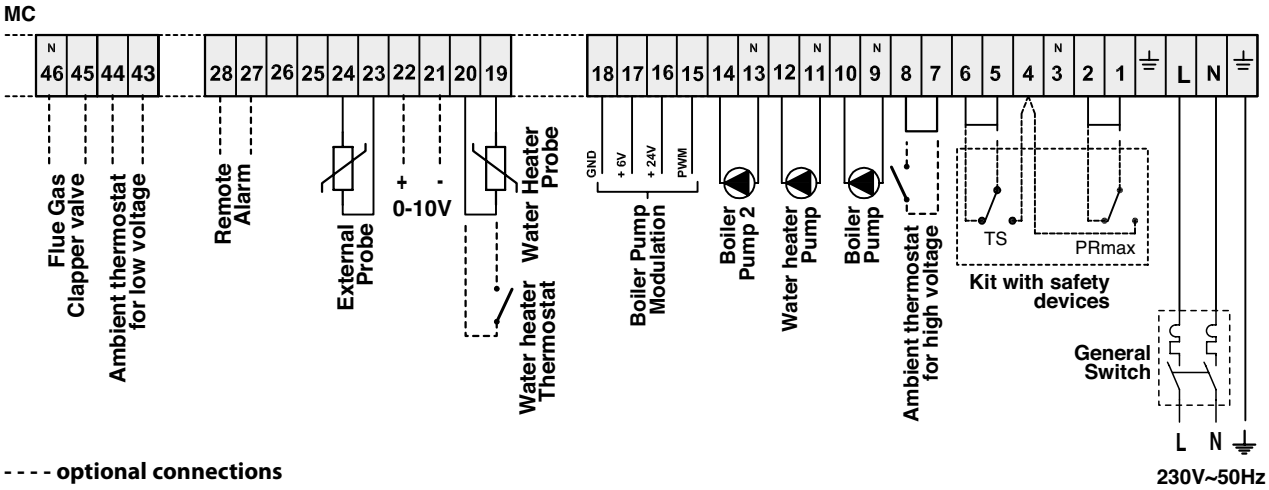

- - - - optional connections

CONNECTIONS FOR OPERATION IN CH AND DHW PRODUCTION MODE WITH WATER HEATER UPSTREAM OF THE HYDRAULIC SEPARATOR (EXAMPLE NO. 3 ON PAGE 21)

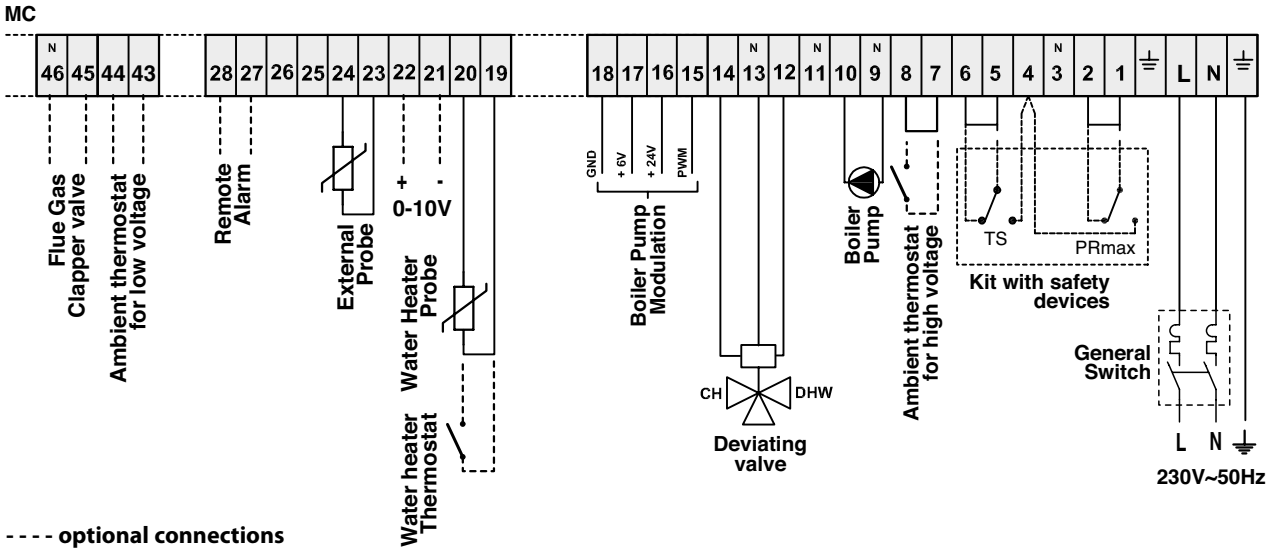

- - - - optional connections

CONNECTIONS FOR OPERATION IN CH AND DHW PRODUCTION MODE WITH MIX VALVE

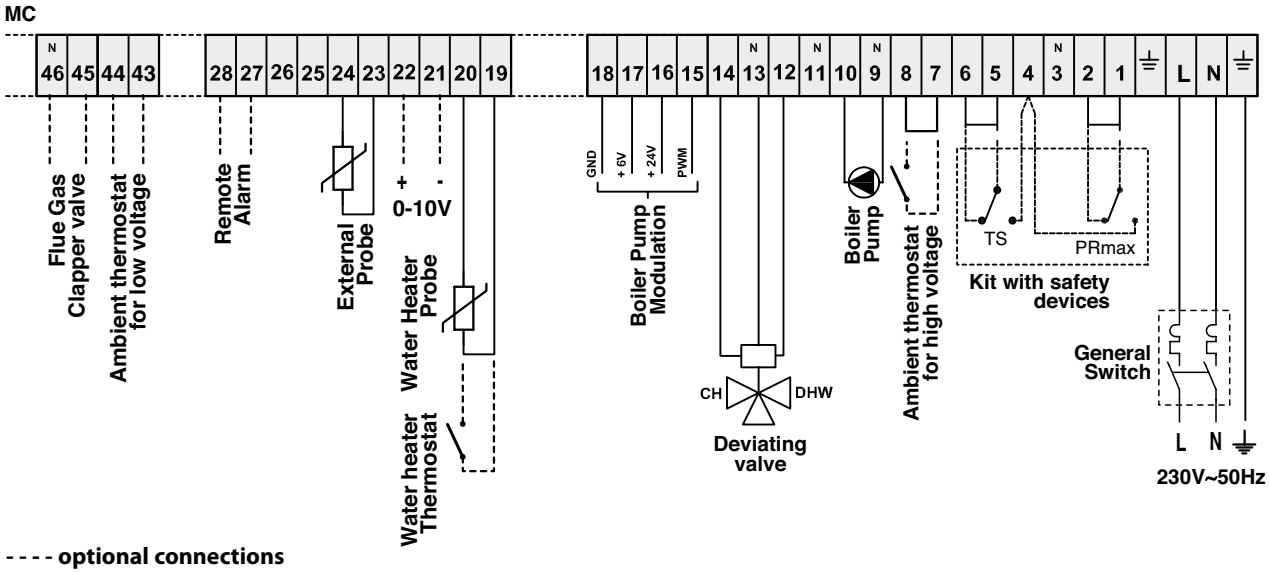

- - - - optional connections

INSTALLATION

⚠ WARNINGS

It is compulsory:
- to use a line isolator omnipolar magnetic breaker, compliant with the EN Standards.
- To connect L (Phase) - N (Neutral).
- NOT to use cables having a cross-section smaller than 1 mm^2.
- To ensure that the grounding conductor is at least 2 cm longer than the L (Phase) - N (Neutral) cables.
- For any electrical work please refer to the wiring diagrams in this manual.
- **Carry out the connections with an effective grounding system (*).**
- DO NOT use the water piping for grounding the device.
- Pay attention to the maximum absorption of the external circulation pumps (see "WIRING DIAGRAM" on page 15).

(*) The manufacturer will not be held responsible for any damages resulting from failure to carry out the grounding of the device and failure to abide by the prescriptions given in the wiring diagrams.

REMOTE ALARM

The outputs of terminals 27-28 offer a clean contact for the management of one alarm signal. This contact is activated every time a thermal unit fault/malfunction occurs.

⚠ WARNINGS

- In case of a thermal unit fault/malfunction the "Warning light - shutdown due to activation of safety devices" **Sbs**, located on the control panel, does not come on. This warning light comes on only when an ISPESL safety device is activated. In this case, the power supply to the thermal unit is cut off.

EXTERNAL PROBE CONNECTION (OPTIONAL)

Install the external probe outside the building, on a plain surface, facing north or north-west (coldest side) and away from chimneys, doors, windows and areas exposed to direct sunlight.

For installation:
- Remove the cover.
- Fix the probe to the wall using 2 blocks.
- Carry out the electrical connections.

NOTE:
- Cable minimum section: 1 mm^2.
- Maximum connection length: 50 m.
- Non-polarised connection terminals.
- Use coaxial shielded cables with double wire and connect the braiding to ground/earth

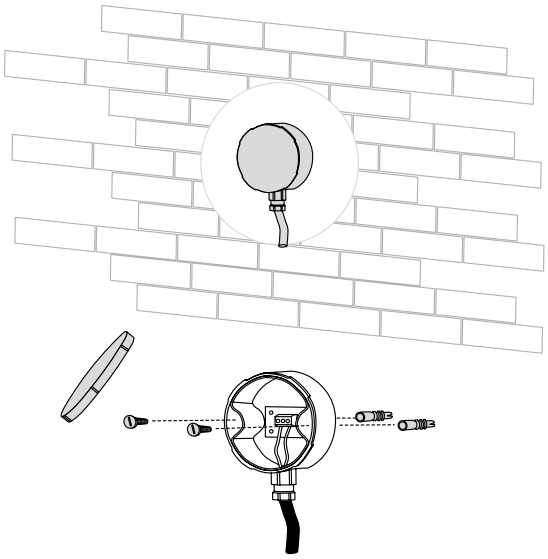

GAS CONNECTION

Connection of **MAUI KR 115-280** devices to the gas supply must be carried out in compliance with the prevailing installation standards.

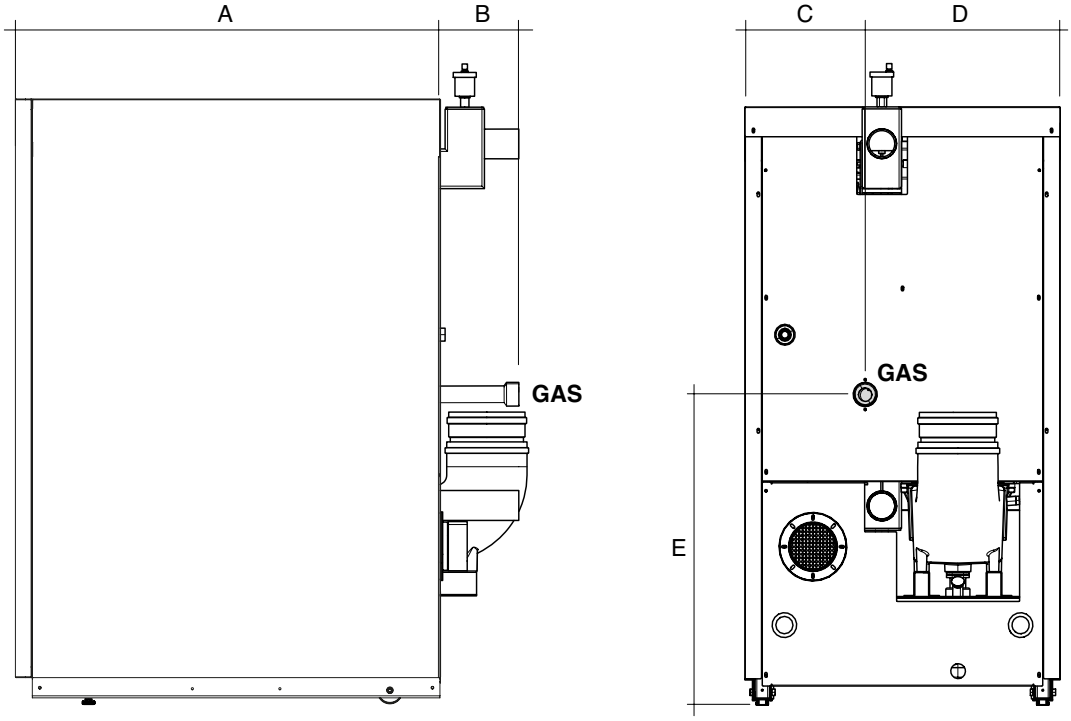

Hydraulic connections	MAUI KR 115-280					
	115	150	200	240	280	
GAS Gas supply	1" 1/2					Ø
A	848	848	1088	1088	1088	mm
B	175					mm
C	245					mm
D	397					mm
AND	624					mm

Prior to executing the connections, make sure that:
- The gas is of the type for which the device has been designed
- The piping is thoroughly clean and free from processing residuals.

It is recommended to install a suitably sized filter.

⚠ WARNINGS

- The gas supply system must be suitable for the flow rate of the device and must be equipped with all the safety and check devices as provided for by the Prevailing Standards.
- After completing the installation, check connection sealing.

FLUE GAS VENT AND COMBUSTION AIR INTAKE

Dimensions	MAUI KR 115-280					
	115	150	200	240	280	
Øi (internal)	150		200			mm
A	108		133			

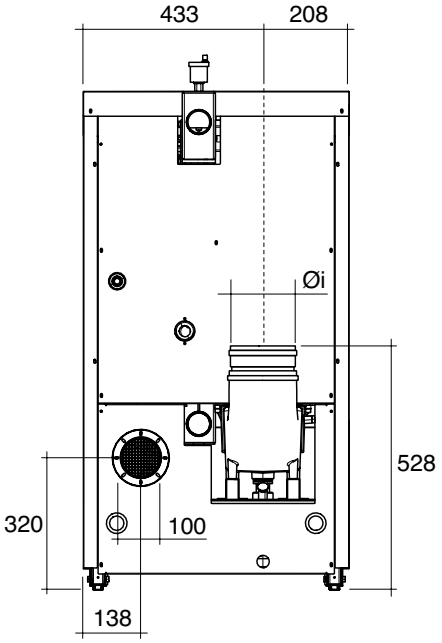

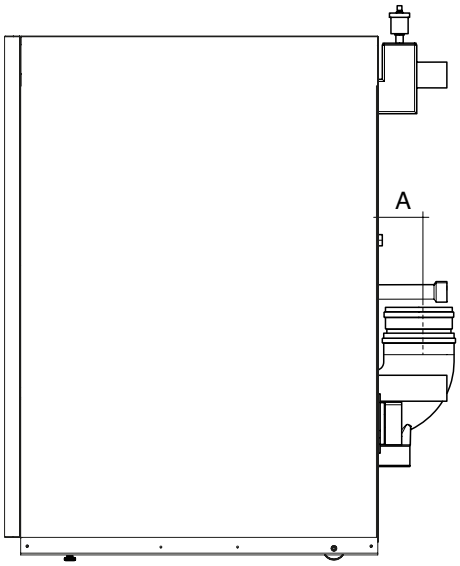

"B-TYPE" Installations

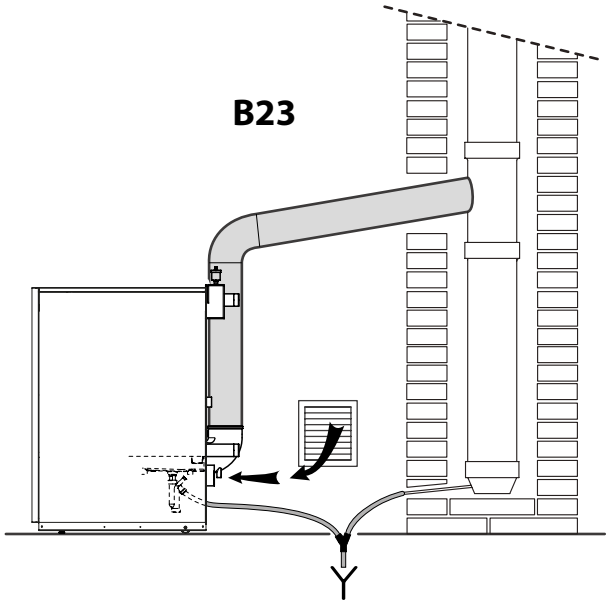

⚠ WARNINGS

- **MAUI KR 115-280** devices feature a flue gas vent probe which will immediately stop device operation if flue gas temperature rises in an abnormal way.
- In this configuration, the device draws the combustion air from the installation room which MUST HAVE aeration openings compliant with the prescriptions of the Technical Standards.
- It is recommended to use stainless steel ducts according to EN1856-1 and EN1856-2 for the flue gas system duct.
- The chimney must ensure the minimum vacuum defined by the prevailing Technical Standards, taking into account a "zero" pressure at the flue gas system duct connection, and it must feature a condensate drain. The boiler condensate drain must discharge only the condensate coming from the boiler and from the flue gas system duct
- Connect the condensate collector trap with a white water drain.
- Vent ducts, if not insulated, are potentially dangerous.
- **The size of the chimney must correctly suit the condensing thermal units. Chimneys and flue gas system ducts of unsuitable type or size may cause problems to the combustion parameters and generate noise.**
- **IT IS FORBIDDEN** to close or reduce the size of the aeration openings of the installation room or of the device.
- Arrange for a 3% inclination of the flue gas vent duct toward a condensate collector.

“C-TYPE” Installations

MAUI devices are approved for the "C43, C53, C63 and C83” types of installation and IT IS COMPULSORY to fit them with flue gas system ducts and combustion air intake ducts compliant with said types of installation.

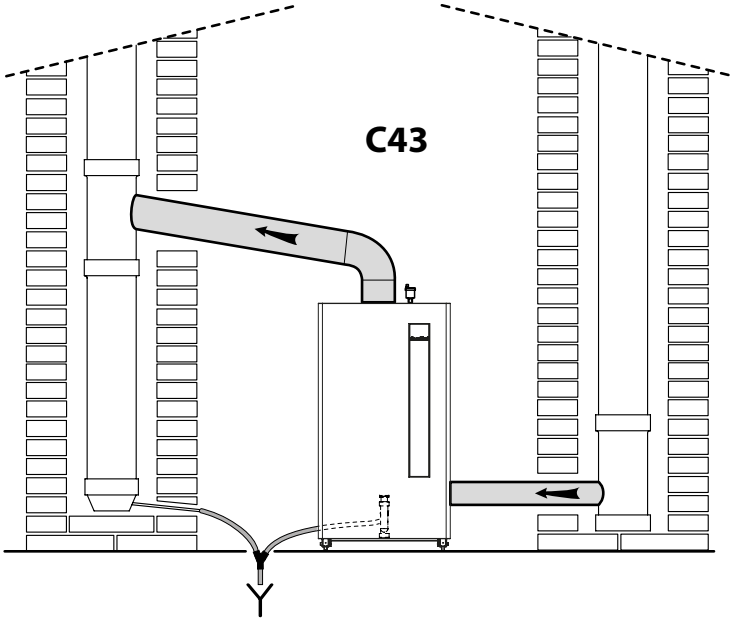

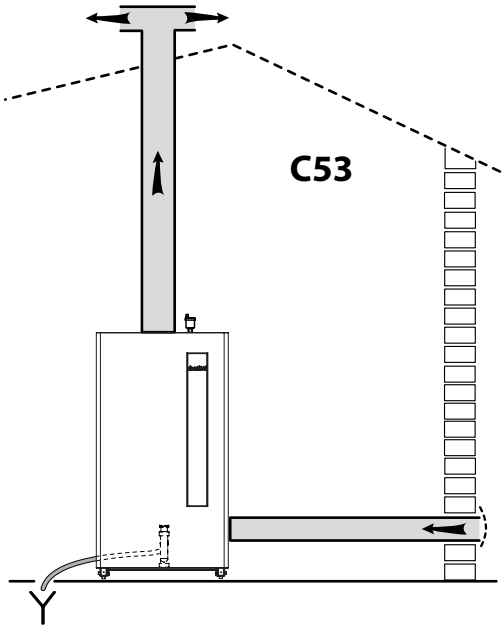

WARNINGS

- In case of installations of “C53” type, the intake and discharge terminals can not be installed on walls opposite the building.

C63

In case ducts and outlets from another manufacturer are used (C63-type), they must be approved. In the case of flue gas vent ducts, the materials used must furthermore be compatible with the condensate products.
When dimensioning the ducts, take into account the values of the residual head to the fan as given in the table on the following page.

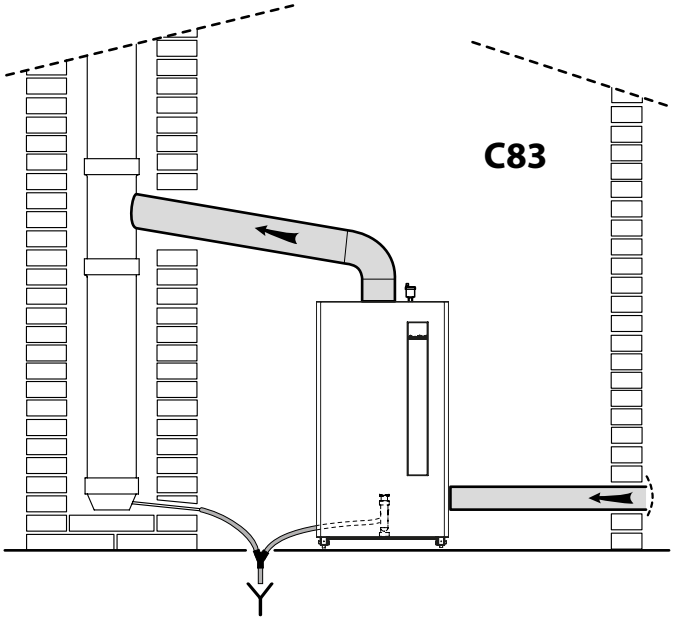

Upon delivery, the thermal unit is in the B23 configuration.
To draw air from the outside it is necessary to connect a plastic pipe with diameter 100 to the intake outlet of the device.
To suck air from the outside it is necessary to connect a plastic tube (d. 100) to the device intake terminal keeping in mind that such duct must not feature a flow resistance higher than the value specified in the table below.

Gas supply and flue gas vent should be in an area having the same pressure.
The protection net placed at the air duct inlet prevents foreign bodies from entering.

Flue gas exhaust and air supply calculations: the table below indicates the total residual head available for the flue gas exhaust and the combustion air intake.

Description	MAUI KR 115-280					
	115	150	200	240	280	
Total residual head (discharge + intake)	320	233	100	180	85	Pa

Make sure that the necessary head does not exceed the values specified in the table, otherwise the pressure switch could trigger and block the thermal unit.

⚠ WARNINGS

- **MAUI KR 115-280** devices feature a flue gas vent probe which will immediately stop thermal unit operation if flue gas temperature rises in an abnormal way.
- In the "C" configuration, the device draws the combustion air from outside the installation room which therefore DOES NOT require aeration openings.
- It is recommended to use stainless steel ducts according to EN1856-1 and EN1856-2 for the flue gas ducts. In case PPS ducts are used, they must be certified and equipped with a condensate collector placed before the connection of the thermal unit flue.
- It is compulsory to use terminals compliant with the EN1856-1 standard requirements.
- Connect the condensate collector trap with a white water drain.
- Vent ducts, if not insulated, are potentially dangerous.
- **The size of the chimney must correctly suit the condensing thermal units. Chimneys and flue gas system ducts of unsuitable type or size may cause problems to the combustion parameters and generate noise.**
- **IT IS FORBIDDEN** to operate the device if the flue gas vent ducts and combustion air intake ducts are unsuitable.
- Arrange for a 3% inclination of the flue gas vent duct toward a condensate collector.

CONDENSATE DRAIN

⚠ WARNINGS

- **The condensate drain duct must be tight and have dimensions suitable for the trap. Moreover it must not have any narrowing or reduction of the "i" tilting, which should be ≥ to 3%.**
- **Condensate must be drained in accordance with the Prevailing National or Local Standards.**
- **Prior to commissioning the system, fill the trap with water.**

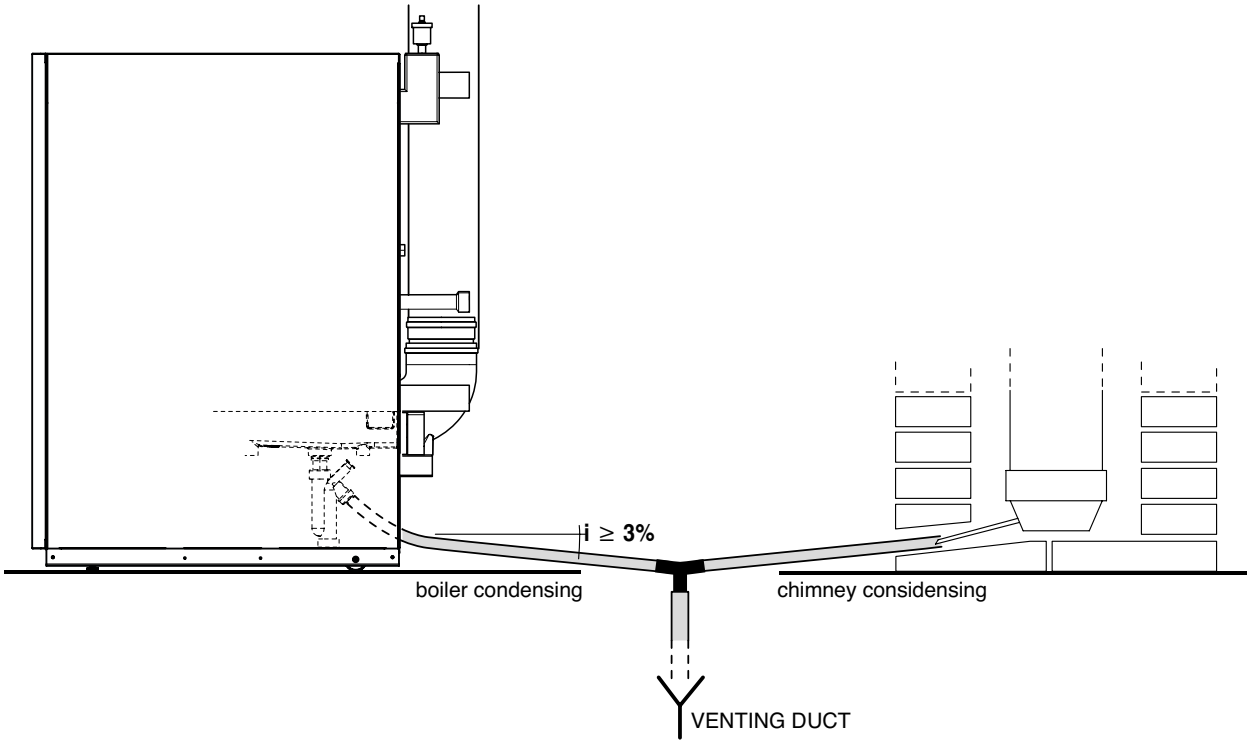

IT is recommended:
- To install a device condensate drain collector and flue gas vent collector
- Provide a neutralization device such as, for instance, the model that can be supplied separately upon request.

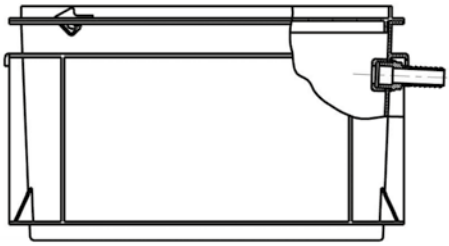

SYSTEM FILLING AND EMPTYING

MAUI 115-280 devices ARE NOT equipped with a system filler cock. It is therefore necessary to arrange a suitable filling system which shall be located in the position most convenient to the installer.
As an indication, the picture shows a possible connection point for the system filling unit (CI).

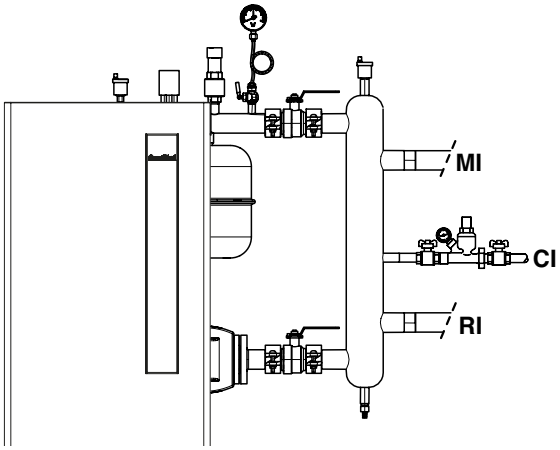

NOTE:
The device is equipped with an automatic air bleeding valve.

Prior to starting filling and emptying the system:

- Turn the system (IG) and the device (Ip) main switches to "OFF"

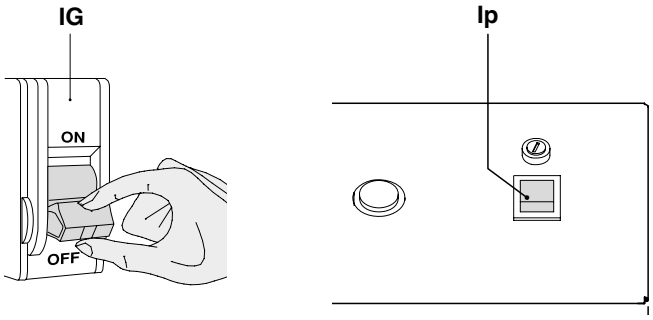

FILLING

- Make sure the discharge cock (1) is closed
- Make sure the preload pressure of the expansion tank(s) is correct
- Open the shut-off devices (CI) of the hydraulic system and start filling slowly until the value of **about 2 bar (when not heated)** can be read on the pressure gauge (2)
- Close the shut-off devices (CI) of the hydraulic system.

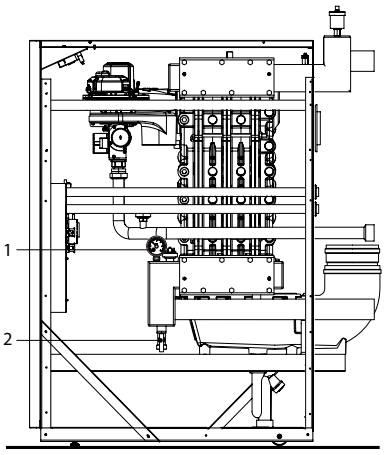

EMPTYING

- Make sure that the shut-off devices (CI) of the hydraulic system are closed
- Connect a conveying piping to the discharge cock (1) and open it
- After completing the emptying operation, close the cock (1).

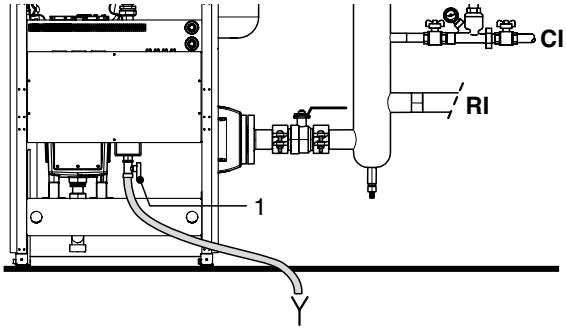

MENU NAVIGATION AND STRUCTURE

Navigation procedure

The device default factory configuration is STAND-BY.
To navigate through menu screens use the keys as indicated in the diagram below.

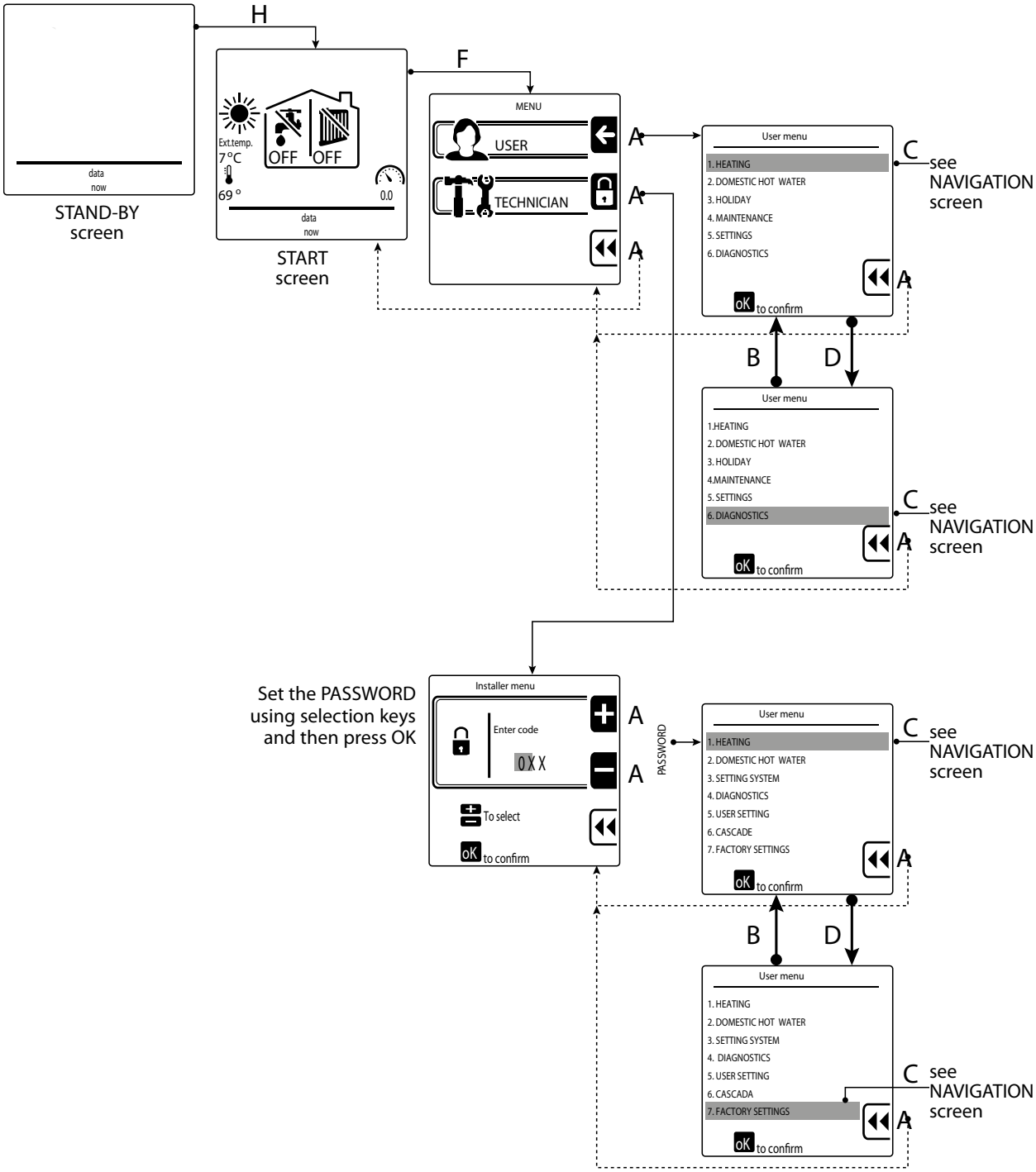

The following pages show the user menu and technical menu structures and the keys to be used for navigation.

User menu navigation

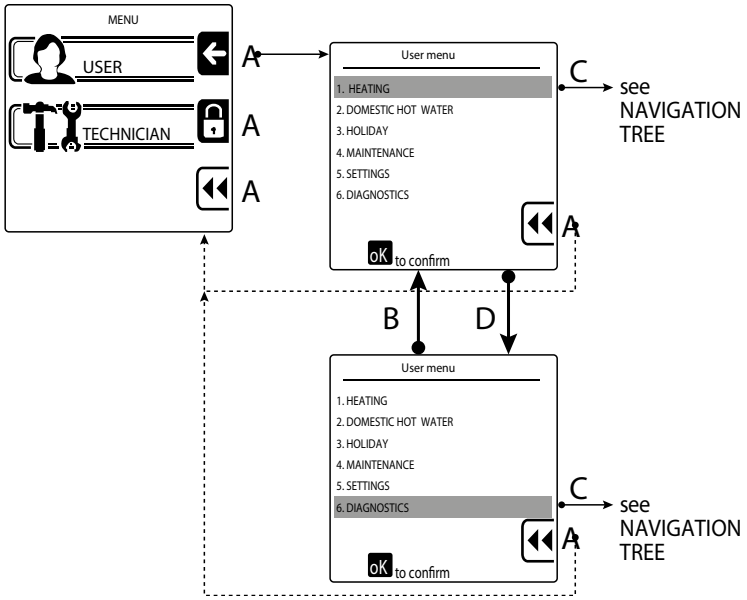

USER MENU	Keys	Sub-menu	Keys	Lines	Keys	Factory value	Range
1. CH	ok	1. CH temperature / ote set	ok	1. CH set point	ok	*75°C*	*20 ÷ absolute T.max (*)*
▼ ▲			▼	2. Outside temperature for ch off	ok	*OFF*	*OFF / 7 ÷ 25°C*
	▼	2. ECO setpoint reduction	ok	--->	--->	*50°C*	*0 ÷ 50°C*
	▼	3. Timer settings	ok	1. Enable / disable timer	ok	*Disabled*	*Enabled / Disabled*
			▼	2. Scheduler set	ok	*Monday*	*days of the week*
2. DHW	ok	1. Temperature setting range	ok	--->	--->	*80°C (**)*	*30 ÷ 90°C*
▼ ▲	▼	2. ECO setpoint reduction	ok	--->	--->	*20°C*	*0 ÷ 50°C*
	▼	3. Timer settings	ok	1. Enable / disable timer	ok	*Disabled*	*Enabled / Disabled*
			▼	2. Timer settings	ok	*Monday*	*days of the week*
3. HOLIDAY	ok	1. CH holiday setpoint	ok	--->	--->	*20°C*	*20 ÷ absolute T.max (*)*
▼ ▲	▼	2. DHW holiday setpoint	ok	--->	--->	*80°C (**)*	*30 ÷ 90°C*
4. MAINTENANCE	ok	1. Service information	ok	--->	--->	*display only*	
▼ ▲	▼	2. Service due date	ok	--->	--->	*display only*	

(*) Maximum absolute temperature set at point "**1.2.1**" of technical menu.
(**) - If "**2.5 REQUEST TYPE**" on technical menu = "Contact" then "Factory value" = 80°C with "Range" = 30 ÷ 90°C.
- If "**2.5 REQUEST TYPE**" on technical menu = "Sensor" then "Factory value" = 60°C with "Range" = 10 ÷ 65°C.

USER MENU	Keys	Sub-menu	Keys	Lines	Keys	Factory value	Range
5. SETTINGS	ok	1. Select language	ok	English / Italiano	ok	*Italiano*	*English / Italiano*
	▼	2. Select unit	ok	Fahrenheit / Celsius	ok	*Celsius*	*Fahrenheit / Celsius*
▼ ▲	▼	3. Set date	ok	--->	--->	*day / month / year*	
	▼	4. Set time	ok	24 hours / 12 hours	ok	*hours : minutes*	
	▼	5. Restore factory data	ok	--->	--->	*OK to restore*	
6. DIAGNOSTICS	ok	1. Boiler information	ok	*set values and parameter display only*			
	▼	2. Lockout history	ok	*fault / malfunction history display only*			

INSTALLATION

MEANING OF USER MENU LINES

Menu line ref.	Line title	Meaning
1. CH		
1.1.1	Temperature setting range	Flow temperature (CH) setpoint setting
1.1.2	External switch-off temperature	External temperature setpoint setting for automatic switch to "summer mode"
1.2	ECO setpoint reduction	Flow temperature reduction value setting for "reduced capacity" (day or night)
1.3.1	Enable/Disable local timer	Enabling or Disabling the "CH time slots" set for different week days
1.3.2	Timer setting	Setting the "CH time slots" valid for different week days
2. DHW		
2.1	Temperature setting range	DHW temperature setpoint setting (in the water heater)
2.2	ECO setpoint reduction	Water heater DHW temperature reduction value setting for "reduced capacity" (day or night)
2.3.1	Enable/Disable local timer	Enabling or Disabling the "DHW production time slots" set for different week days
2.3.2	Timer setting	Setting the "DHW production time slots" valid for different week days
3. HOLIDAY		
3.1	CH temperature	Flow temperature setpoint setting during holiday period
3.2	DHW temperature	DHW temperature setpoint setting during "holiday" period
4. MAINTENANCE		
4.1	Service information	Technical service telephone number display
4.2	Maintenance date	Next maintenance date display

Menu line ref.	Line title	Meaning
5. SETTINGS		
5.1	Language	Language selection (English or Italian)
5.2	Unit of measurement	Unit of measurement selection (Celsius or Fahrenheit)
5.3	Set date	Current date setting of modification
5.4	Set time	12 or 24 hour format selection - Current time setting or editing
5.5	Restore factory settings	Restores factory settings
6. DIAGNOSTICS		
6.1	Boiler information	Boiler status and measured temperatures display. To view, select the message, press ok and view the values scrolling with arrows ▼ ▲
6.2	Fault history	Fault list display.

TECHNICAL MENU NAVIGATION

To access the technical menu, enter the PASSWORD "**231**".

Follow the steps below:

- press 2 TIMES the key + followed by the key ok
- press 3 TIMES the key + followed by the key ok
- press 1 TIME the key + followed by the key ok

The system allows exiting and then re-entering the technical menu without entering the password again, for a maximum time of 15 minutes. After this time, when accessing the technical menu the system will request the user to re-enter the password.

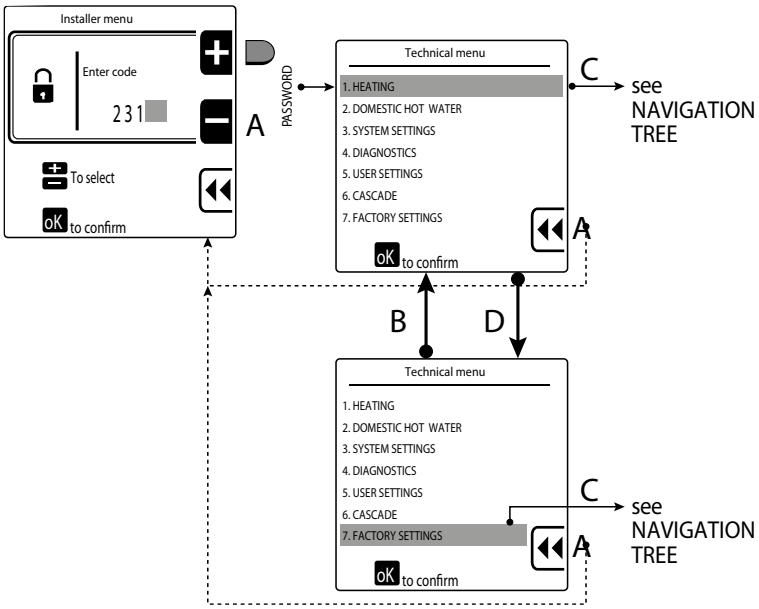

TECHNICAL MENU	Keys	Sub-menu	Keys	Lines	Keys	Factory value	Range
1. ADVANCED CH SETTINGS	ok	1. CH power set	ok	1. Maximum power 100%	ok	*100%*	*0 ÷ 100%*
			▼	2. Minimum power 0%	ok	*0%*	*0 ÷ 100%*
	▼	2. CH temperatures	ok	1. Absolute maximum temperature	ok	*90°C*	*20 ÷ 95°C*
			▼	2. CH maximum setpoint	ok	*75°C*	*20 ÷ 95°C*
			▼	3. CH minimum setpoint	ok	*40°C*	*20 ÷ 70°C*
			▼	4. DHW setpoint hysteresis	ok	*3°C*	*2 ÷ 10°C*
▼ ▲	▼	3. OTC parameters	ok	1. Outside temperature for max CH	ok	*-10°C*	*-34 ÷ 10°C*
			▼	2. Outside temperature for min CH	ok	*18°C*	*15 ÷ 25°C*
			▼	3. Outside temperature for CH off	ok	*OFF*	*OFF / 7 ÷ 25°C*
			▼	4. OTC setpoint table	ok	*display only*	
			▼	5. OTC curve	ok	*display only*	
	▼	4. CH pump settings	ok	1. Post pump time	ok	*5'*	*1' ÷ 30'*
	▼	5. CH anticycling timer	ok	--->	--->	*2'*	*0' ÷ 15'*
	▼	6. CH request type	ok	External probe / Ambient thermostat / 0-10V [%] / 0-10V Signal [SP]	ok	*Ambient thermostat*	*External probe / Amb. therm. /* 0-10V [%] / 0-10V Signal [SP]
2. ADVANCED DHW SETTINGS	ok	1.DHW power	ok	1. Maximum output 100%	ok	*100%*	*0÷100%*
			▼	2. Minimum output 0%	ok	*0%*	*0÷100%*
	▼	2.DHW temperatures	ok	1. Storage temperature setpoint	ok	*80°C*	*30÷90°C*
			▼	2. Boiler temperature setpoint	ok	*60°C*	*10÷65°C*
▼ ▲			▼	3.DHW hysteresis	ok	*3°C*	*2÷10°C*
	▼	3.DHW Pump settings	ok	1.DHW post pump time	ok	*30s*	*Off/1÷180s*
	▼	4.DHW Priority	ok	1.DHW priority status	ok	*Enabled*	*Enabled / Disabled*
			▼	2.DHW priority timeout	ok	*Off*	*Off/1÷60min.*
	▼	5.DHW Request type	ok	---> switch sensor	--->	*Contact*	*Contact / Sensor*

(*) If the DHW request type is "sensor", the thermal unit will heat the water up to the temperature set in point "2.2.2" of the Engineer menu + 20 °C.

INSTALLATION

TECHNICAL MENU	Keys	Sub-menu	Keys	Lines	Keys	Factory value	Range
3. SYSTEM SETTINGS	ok	1.Boiler parameters	ok	1.Ignition power	ok	*36%*	*0÷100%*
▼ ▲			▼	2. Delay siphon check	ok	*10s*	*0÷60s*
			▼	3.Number of boiler pump	ok	*Double pump*	*Pump and 3-way valve / Double pump*
			▼	4.Pump speed max	ok	*100%*	*15÷100%*
			▼	5.Pump speed min	ok	*30%*	*15÷100%*
			▼	6.Antilegionella	ok	*Enabled*	*Enabled / Disabled*
			▼	7. Heat exchanger protection	ok	*Enabled*	*Enabled / Disabled*
			▼	8.Heat exchanger delta	ok	*10°C*	*5÷20°C*
			▼	9.Modbus parameters	ok	*0*	*0÷255*
			▼	10. 3 way valve travel time	ok	*10s*	*1÷255s*
	▼	2.User interface settings	ok	1. Select language	ok	*Italiano*	*English / Italiano*
			▼	2. Select units	ok	*Celsius*	*Fahrenheit / Celsius*
			▼	3.Set date	ok		*Enter the date*
			▼	4. Set time	ok	*24 hours*	*24 hours / 12 hours*
	▼	3. System settings	ok	1.Service information	ok		*Enter tel. no.*
			▼	2.Maintenance date	ok		*Enter date*
4.DIAGNOSTICS	ok	1. Boiler information	ok	--->	--->	--------	
▼ ▲	▼	2. Lockout history	ok	--->	--->	--------	
	▼	3. Manual test	ok	--->	--->	*OFF*	*OFF / 0-100%*

TECHNICAL MENU	Keys	Sub-menu	Keys	Sub-menu	Keys	Lines	Keys	Factory value	Range
5. USER SETTINGS	ok	1.CH	ok	1.Temperature setting range	ok	1.Temperature setting range	ok	*75°C*	*20 ÷ 90°C*
					▼	2.External switch-off temperature	ok	*OFF*	*OFF / 7 ÷ 25°C*
			▼	2.ECO setpoint reduction	ok	--->	--->	*50°C*	*0 ÷ 50°C*
			▼	3.Timer setting	ok	1.Enable/Disable local timer	ok	*Disabled*	*Enabled / Disabled*
					▼	2.Timer setting	ok	*Monday*	*days of the week*
▼ ▲	▼	2.DHW	ok	1.Temperature setting range	ok	--->	--->	*80°C*	*30 ÷ 90°C*
			▼	2.ECO setpoint reduction	ok	--->	--->	*20°C*	*0 ÷ 50°C*
			▼	3.Timer setting	ok	1.Enable/Disable local timer	ok	*Disabled*	*Enabled / Disabled*
					▼	2.Timer setting	ok	*Monday*	*days of the week*
	▼	3.Holiday	ok	1.CH temperature	ok	--->	--->	*20°C*	*20 ÷ 90°C*
			▼	2.DHW temperature	ok	--->	--->	*30°C*	*30 ÷ 90°C*
6.CASCADE	ok	1.Cascade set	ok	1.Cascade switch delay	ok	--->	--->	*60s*	*0÷255 s*
			▼	2.Cascade min power	ok	--->	--->	*18%*	*0÷100%*
			▼	3. Single burner power	ok	--->	--->	*115kW*	*0÷2550kW*
			▼	4.Boiler for DHW	ok	--->	--->	*0*	*0÷6*
			▼	5.Pi loop period	ok	--->	--->	*5s*	*1÷15 s*
			▼	6.Burner waterflow delay	ok	--->	--->	*30s*	*0÷255 s*
▼ ▲			▼	7. Different boiler size	ok	--->	--->	*Disabled*	*Enabled / Disabled*
			▼	8.Cascade pump speed max	ok	--->	--->	*100%*	*15÷100%*
			▼	9.Cascade pump speed min	ok	--->	--->	*30%*	*15÷100%*
	▼	2.Cascade info	ok	--->	--->	--->	--->	*Display only*	
	▼	3.Cascade autodetect	ok	--->	--->	--->	--->	-----	-----

INSTALLATION

TECHNICAL MENU	Keys	Sub-menu	Keys	Sub-menu	Keys	Lines	Keys	Factory value	Range
7.FACTORY SETTINGS	ok	To restore factory settings							
8. BOILER TYPE	ok	1. Wall hung boiler	ok	1. G20	ok	1. 60kW	ok	--->	*Set*
					▼	2. 100kW	ok	--->	*Set*
					▼	3. 115kW	ok	--->	*Set*
			▼	2. LPG/G30	ok	1. 60kW	ok	--->	*Set*
					▼	2. 100kW	ok	--->	*Set*
					▼	3. 115kW	ok	--->	*Set*
▼ ▲	▼	2. Floor standing boiler	ok	1. G20	ok	1. 115kW	ok	--->	*Set*
					▼	2. 150kW	ok	--->	*Set*
					▼	3. 200kW	ok	--->	*Set*
					▼	4. 240kW	ok	--->	*Set*
					▼	5. 280kW	ok	--->	*Set*
			▼	2. G31	ok	1. 115kW	ok	--->	*Set*
					▼	2. 150kW	ok	--->	*Set*
					▼	3. 200kW	ok	--->	*Set*
					▼	4. 240kW	ok	--->	*Set*
					▼	5. 280kW	ok	--->	*Set*
	▼	3. Floor standing boiler	ok	1. G20	ok	1. 340kW	ok	--->	*Set*
					▼	2. 410kW	ok	--->	*Set*
					▼	3. 480kW	ok	--->	*Set*
					▼	4. 550kW	ok	--->	*Set*
					▼	5. 620kW	ok	--->	*Set*

MEANING OF TECHNICAL MENU ITEMS

Menu line ref.	Line title	Meaning
1. CH		
1.1.1.	Maximum output	Maximum cascade pump speed
1.1.2.	Minimum output	Minimum cascade pump speed
1.2.1	Maximum absolute temperature	Setting of the maximum flow temperature that can be tolerated by the device
1.2.2	Maximum set temperature	Setting of the maximum flow temperature corresponding to the minimum external temperature
1.2.3	Minimum set temperature	Setting of the minimum flow temperature corresponding to the maximum external temperature
1.2.4	CH hysteresis	Value in C°, over the maximum set temperature, before burner shutdown
1.3.1	Maximum CH external temperature	Setting of the minimum external temperature corresponding to the maximum flow temperature
1.3.2	Minimum CH external temperature	Setting of the maximum external temperature corresponding to the minimum flow temperature
1.3.3	CH OFF external temperature	External temperature setting for automatic switch to "summer mode"
1.3.4	External temperature setpoint table	View the correspondence between external temperature and flow temperature, according to the set climate curve
1.3.5	Heating curve	View the set climate curve graph
1.4.1	Post-circulation time	Post-circulation time setting
1.5	Ignition timer	Time interval during which any burner ignition requests are ignored
1.6	Request type	Select the device to be used: External probe, ambient thermostat, 0-10V [%] (output) signal. 0-10V [SP] (temperature) signal
2. DOMESTIC HOT WATER		
2.1.1	Maximum output	Maximum output setting
2.1.2	Minimum output	Minimum output setting
2.2.1	Water heater temperature	Water temperature in primary circuit for water heater filling (if water heater thermostat is present)
2.2.2	DHW temperature	DHW temperature (with water heater probe)
2.2.3	DHW hysteresis	Value below temperature set via parameter 2.2.2, in presence of which a DHW request to the boiler starts
2.3.1	Post-circulation time	Post-circulation time setting
2.4.1	DHW status	Enable or Disable priority of DHW over CH
2.4.2	Timeout	Setting of the time interval after which the DHW priority ends (CH, if present, is supplied for the same time interval as the DHW)
2.5	Request type	Select the device to be used: Sensor (Probe) or Contact (Thermostat)
3. SYSTEM SETTINGS		
3.1.1	Ignition power	Burner ignition power
3.1.2	Trap control delay	Setting of the delay before trap pressure switch malfunction warning
3.1.3	Number of boiler pumps	CH double pump and 3-way valve selection

Menu line ref.	Line title	Meaning
3.1.4	Maximum pump speed	(Primary) boiler pump maximum speed
3.1.5	Minimum pump speed	(Primary) boiler pump minimum speed
3.1.6	Anti-legionella	Anti-legionella function enabling or disabling
3.1.7	Boiler body protection	Boiler body protection with probe - enabling or disabling
3.1.8	Boiler body delta	Setting of flow temperature increase, above which the boiler body temperature sets a fault
3.1.9	Modbus address	Changes the display address on bus
3.1.10	3-way valve travel time	Changes the 3-way valve travel time for DHW (if present)
3.2.1	Language	Language selection (English or Italian)
3.2.2	Unit of measurement	Unit of measurement selection (Celsius or Fahrenheit)
3.2.3	Set date	Current date setting of modification
3.2.4	Set time	12 or 24 hour format selection - Current time setting or editing
3.3.1	Service information	Technical Service telephone number entry
3.3.2	Maintenance date	Next maintenance date entry
4. DIAGNOSTICS		
4.1	Boiler information	Boiler status and measured temperatures display. To view, select the message, press **C** and view the values scrolling with arrows **D B**
4.2	Fault history	Fault list display.
4.3	Manual test	Forces a CH cycle, with adjustable output, lasting no longer than 15 minutes
5. USER SETTINGS		
5.1	Central heating	See USER menu - 1. CH
5.2	DHW	See USER menu - 2. DOMESTIC HOT WATER
5.3	Holiday	See USER menu - 3. HOLIDAY

Menu line ref.	Line title	Meaning
6. CASCADE		
6.1.1	Cascade module delay	Time interval between the ignition of different boilers
6.1.2	Minimum modulation head output	Minimum available cascade output
6.1.3	Individual burner heat output	Maximum heat output of an individual burner
6.1.4	DHW boilers	Number of boilers allocated to DHW
6.1.5	PI loop time	Time interval needed for recalculation of the necessary heat output
6.1.6	Water flow delay	Delay in the response to the thermoregulation algorithm based on the hydraulic structure. If the cascade has a circuit breaker, it is possible to calibrate the time after which a temperature variation, detected by the cascade probe, is actually perceived by the control board.
6.1.7	Boiler with different heat output	Enabling or disabling of the algorithmic management of cascade boilers with different heat output values (e.g., when there is a reduced heat output generator for DHW production). If multiple generators with the same heat output are used together, enabling the algorithm is not necessary.
6.1.8	Maximum cascade pump speed	Adjustment of the maximum speed allowed for the cascade pump
6.1.9	Minimum cascade pump speed	Adjustment of the minimum speed allowed for the cascade pump
6.2	Cascade information	Cascade information display.
6.3	Cascade autodetect	Cascade auto-configuration start
7. FACTORY SETTINGS		Restore factory settings
8. TYPE OF BOILER		
8.1	Wall-hung	Setting of the type of boiler as "Wall-hung boiler" and selection of the model according to the heat output. Change of the gas type in use
8.2	Base 1	Setting of the type of boiler as "Boiler with base" MAUI KR 115-280 and selection of the model according to the heat output Change of the gas type in use
8.3	Base 2	Setting of the type of boiler as "Boiler with base" MAUI KR 340-620 and selection of the model according to the heat output Change of the gas type in use

COMMISSIONING

PRELIMINARY ACTIVITIES

By default, when delivered from the factory, **MAUI 115-280** thermal units are:
- set for operating with G20 (natural gas), however they can also work with G31 (propane)

- with the device in stand-by mode

- in "none" operating mode; both CH and DHW requests are inhibited. This prevents the boiler from starting when it is supplied with power even in case of heat requests.

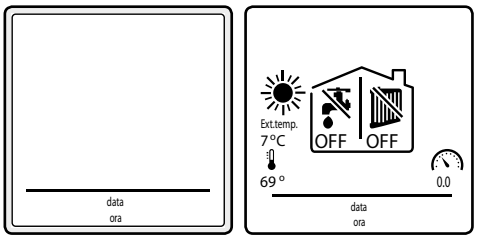

INSTALLATION

Before commissioning the device, it is essential to define the type of gas which will be used for operation. If G31 will be used, the gas change procedure must be carried out as described in paragraph GAS CHANGE on page 46.

Then, make sure that:
- the gas and hydraulic system shut-off cocks are open
- the pressure of the gas in the system is correct and that the piping is purged
- the hydraulic system pressure is above 2 bar when the system is not heated and that the circuit is deaerated
- the expansion tank is installed, correctly dimensioned and preloaded
- the electrical connections are correctly executed
- the flue gas vent ducts and the combustion air intake openings (if available) have been suitably carried out
- the safety valve is present and its rating is compatible with the maximum working pressure of 6 bar
- the trap is filled and the condensate drain is conveyed in a proper way.

⚠ **WARNINGS**
- Make sure that there is no ice inside the boiler before powering it on.

COMMISSIONING

- Power the thermal unit by turning the system (IG) and the device (Ip) main switches to "ON".

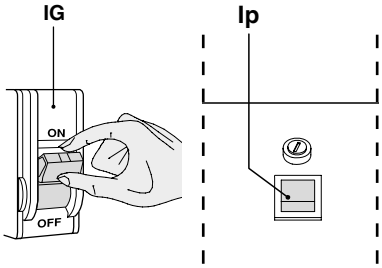

- The display will show the stand-by screen.

- Press ⏻ to enable device keypad.

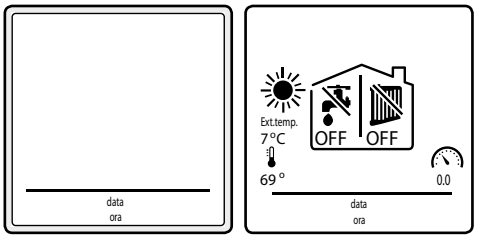

USER INTERFACE SETUP FROM TECHNICAL MENU

This procedure allows checking or changing the LANGUAGE and UNIT OF MEASUREMENT in use and to set the current date and time.

Key to press	Description	Display
menu	to view the MENU screen	
	to enter the TECHNICAL MENU that requires a PASSWORD	
2 TIMES	To enter PASSWORD "231":	
	to set the first digit "2"	
ok	to confirm and move to second digit	
3 TIMES	to set the second digit "3"	
ok	to confirm and move to third digit	
1 TIME	to set the third digit "1"	
ok	to confirm password and enter the menu	
2 TIMES	to select "3. SYSTEM SETUP"	
ok	to confirm and access the selected line	
1 TIME	to select "2. User interface settings"	
ok	to confirm and access the selected line	
ok	to confirm and access the selected line	
	to change language in use	
ok	to confirm your selection and go back to line "1. Language"	

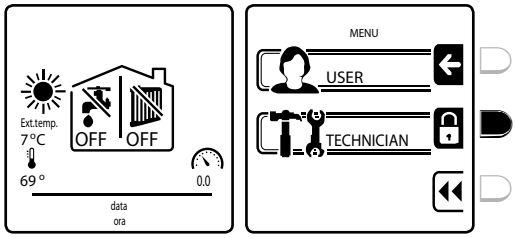

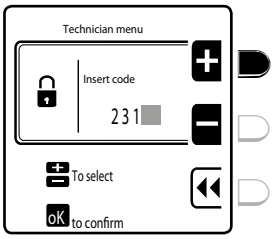

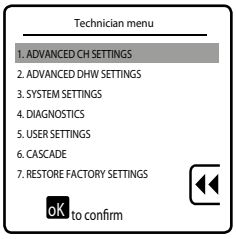

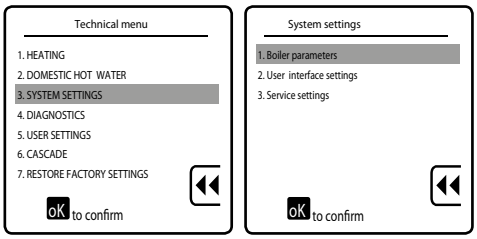

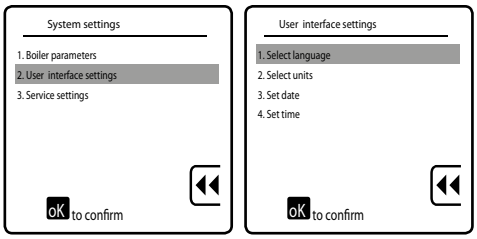

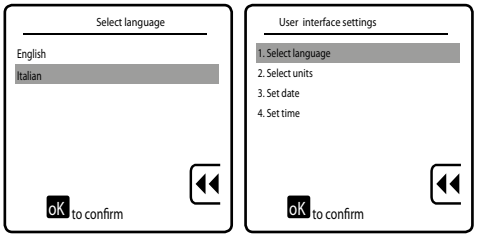

INSTALLATION

Key to press	Description	Display
▼	to select "2. Unit of measurement"	User interface settings 1. Select language 2. Select units 3. Set date 4. Set time ok to confirm
ok	to confirm and access the selected line	Select units Fahrenheit Celsius ok to confirm
▲	to edit the desired unit of measurement	
ok	to confirm your selection and go back to line "2. Unit of measurement"	
▼	to select "3. Set date"	User interface settings 1. Select language 2. Select units 3. Set date 4. Set time ok to confirm
ok	to confirm and access the selected line	Set date 04 / 01 2001 To select ok to confirm
+ OR −	to set the current day	Set date 04 / 01 2001 To select ok to confirm
▼	to select the month	
+ OR −	to set the current month	Set date 09 / 01 2001 To select ok to confirm Set date 09 / 11 2001 To select ok to confirm
▼	to select the year	
+ OR −	to set the year	Set date 09 / 11 2012 To select ok to confirm User interface settings 1. Select language 2. Select units 3. Set date 4. Set time ok to confirm
ok	to confirm set value and go back to line "3. Set date"	

Key to press	Description	Display
▼	to select "4. Set time"	User interface settings 1. Select language 2. Select units 3. Set date 4. Set time oK to confirm
ok	to confirm and access the selected line	Selection format 24 hours 12 hours oK to confirm
▼	to change time format in use	Set time 10:05 To select oK to confirm
ok	to confirm and access the selected line	
+ OR −	to set the current time	Set time 16:05 To select oK to confirm
▼ OR ok	to select minutes	Set time 16:20 To select oK to confirm User interface settings 1. Select language 2. Select units 3. Set date 4. Set time oK to confirm
+ OR −	to set minutes	
ok	to confirm set value and go back to line "4. Set time"	

FACTORY SETTING VERIFICATION / EDITING

The device default factory configuration is outlined in paragraph "TECHNICAL MENU navigation" on page 34. If factory settings are not suitable for the specific system, follow the navigation structure to find the value that needs to be modified more easily.

GAS CHANGE

By default, the thermal unit is preset for G20 when delivered from the factory. To use it with LPG, proceed as follows.

Key to press	Description	Display
menu	to view the MENU screen	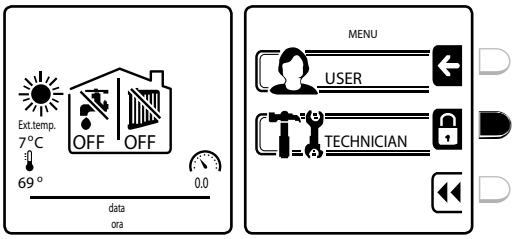
	to enter the TECHNICAL MENU that requires a PASSWORD	
+ 2 TIMES	To enter PASSWORD "231":	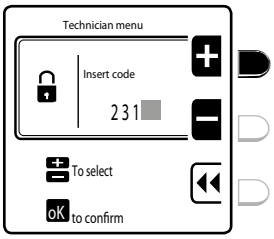
	to set the first digit "2"	
ok	to confirm and move to second digit	
+ 3 TIMES	to set the second digit "3"	
ok	to confirm and move to third digit	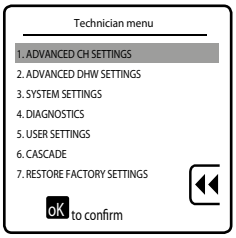
+ 1 TIME	to set the third digit "1"	
ok	to confirm password and enter the menu	
▼ 7 TIMES	to select “8. TYPE OF BOILER”	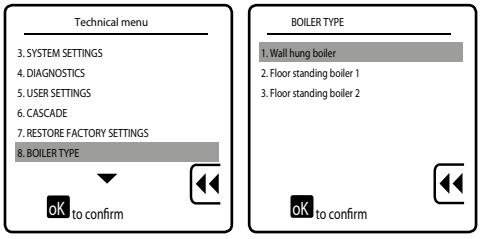
ok	to confirm and access the selected line	
▼	to select “2. Base 1”	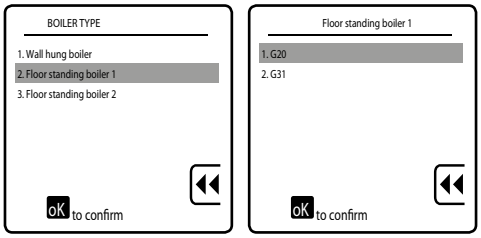
ok	to confirm and access the selected line	
▼	to select “2. G31”	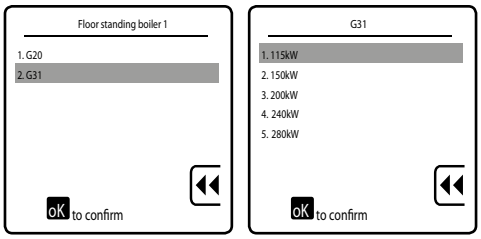
ok	to confirm and access the selected line	

Key to press	Description	Display
▼	to select the heat output corresponding to the device model	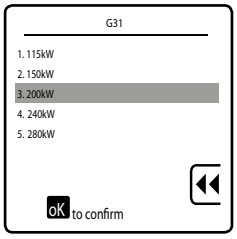 
ok	to confirm your selection and go back to the START screen	

Setting the "gas change" parameter determines AUTOMATICALLY the number of fan revolutions indicated in the table.

DESCRIPTION		MAUI KR 115-280					
		115	150	200	240	280	
Nominal heat output Min. ÷ Max.		21,0 ÷ 113,0	30,0 ÷ 150,0	35,5 ÷ 200,0	42,5 ÷ 235,0	49,5 ÷ 275,0	kW
Operating rpm	**with G20**	1665 ÷ 7400	1650 ÷ 6250	1230 ÷ 5600	1320 ÷ 5800	1300 ÷ 5800	rpm
Frequency		55.5 ÷ 246.7	55 ÷ 208.3	61.5 ÷ 280	66 ÷ 290	65 ÷ 290	Hz
Operating rpm	**with G31**	1665 ÷ 7400	1650 ÷ 6250	1230 ÷ 5600	1320 ÷ 5800	1300 ÷ 5800	rpm
Frequency		55.5 ÷ 246.7	55 ÷ 208.3	61.5 ÷ 280	66 ÷ 290	65 ÷ 290	Hz

INSTALLATION

THERMAL UNIT IGNITION

Now, to switch on the thermal unit:
- Make sure that the jumper or TA between terminals 7 and 8 is present (and sending an ignition request to the boiler). If these conditions are not present, the boiler does not work.

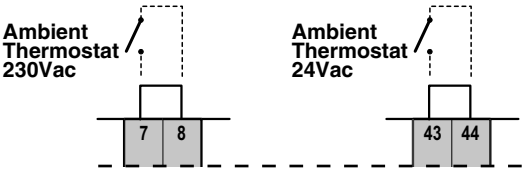

MANUAL TEST function

This procedure allows forcing a CH cycle, with adjustable output, lasting no longer than 15 minutes.

Key to press	Description	Display
menu	to view the MENU screen	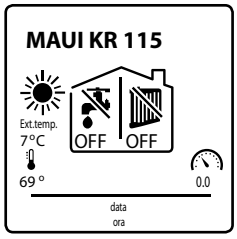 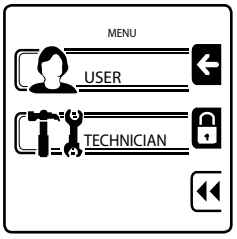
D	to enter the TECHNICAL MENU that requires a PASSWORD	

Key to press	Description	Display
+ 2 TIMES	To enter PASSWORD "231":	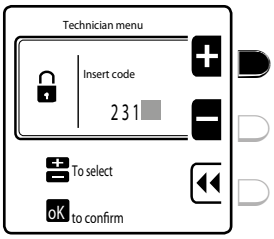
ok	to set the first digit "2" to confirm and move to second digit	
+ 3 TIMES	to set the second digit "3"	
ok	to confirm and move to third digit	
+ 1 TIME	to set the third digit "1"	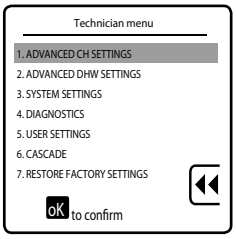
ok	to confirm password and enter the menu	
▼ 3 TIMES	to select "4. DIAGNOSTICS"	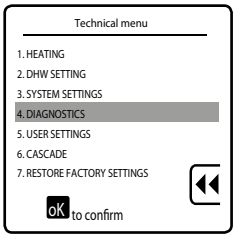 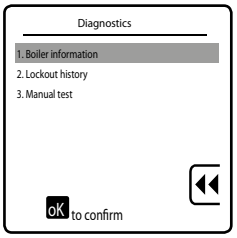
ok	to confirm and access the selected line	
▼ 2 TIMES	to select "3. Manual test"	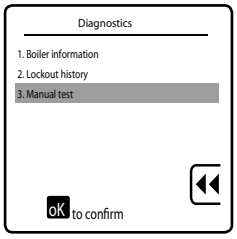
ok 1 TIME	to confirm	
ok	to start the test (maximum duration 15 minutes)	
+ OR −	to increase or decrease heat output (from 0 to 100%)	
	Perform all checks described in section “FUNCTIONAL CHECKS - ADJUSTMENT AFTER GAS CHANGE” on page 50	
ok	to disable the MANUAL TEST function	

In case of a malfunction, the device performs a **Safety Shutdown** or a **Safety Stop**, based on the type of fault/malfunction that occurred, which is shown on the device display.

Safety shutdown

The table below lists the faults/malfunctions that cause a Safety Shutdown.

To restore normal operating conditions:
- Disconnect the device from the power and gas supply
- Remove the cause of the fault
- Restart the device.

Visualization on Display		Meaning
No Ignition	Fault 1	Flame ignition did not take place within the device safety time interval for 3 consecutive times
False Flame	Fault 2	False flame detection
High Temperature	Fault 3	The device safety thermostat was triggered due to high temperature
Fan speed	Fault 5	Fan speed is not detected
Flame circuit	Fault 8	Flame (circuit) detection fault
Gas valve	Fault 9	Gas valve (circuit) fault
	Fault 13	Repeated faults after 5 manual resets within less than 15 minutes. Switch the device power supply off and on again.
Internal board/device	Fault 21	Internal board/device malfunction
CRC connection	Fault 25	CRC Connection Fault
Flow probe short circuit	Fault 30	The flow probe detected a temperature outside the allowed range (probe short circuit)
Flow probe - circuit open	Fault 31	The flow probe detected a temperature outside the allowed range (probe circuit open)
Return probe short circuit	Fault 43	The return probe detected a temperature outside the allowed range (probe short circuit)
Return probe - circuit open	Fault 44	The return probe detected a temperature outside the allowed range (probe circuit open)

Safety stop

The table below lists the faults/malfunctions that cause a Safety Stop.

To restore normal operating conditions:
- Disconnect the device from the power and gas supply
- Remove the cause of the fault

The device will restart automatically upon receiving the first heat request.

Visualization on Display		Meaning
	Fault 7	Flue gas temperature out of safety limit
High Flow/Return ΔT	Fault 11	Flow/Return ΔT >5°C for at least 5 seconds, in stand-by, continuously measured
	Fault 15	Upon start-up: (Flow Temp. - Ret. Temp.) > 3°C
	Fault 16	Upon start-up Flow Temp. does not vary by at least 1°C
	Fault 17	Upon start-up Return Temp. does not vary by at least 1°C
	Fault 18	Generic sensor fault, reading out of safety limit
DHW probe short circuit	Fault 32	The DHW probe detected a temperature outside the allowed range (probe short circuit)
DHW probe - circuit open	Fault 33	The DHW probe detected a temperature outside the allowed range (probe circuit open)
Mains voltage low	Fault 34	The mains voltage is low (V<230-15%)
Water pressure low	Fault 37	The water pressure switch detects a low pressure
Timeout water pressure	Fault 41	The water pressure update frequency is too low
Flue gas probe short circuit	Fault 45	The flue gas probe is in short circuit or detected a flue gas temperature outside the allowed range (probe short circuit)

Visualization on Display		Meaning
Flue gas sensor - open circuit	Fault 46	The flue gas probe detected a temperature outside the allowed range (probe circuit open)
Water pressure switch	Fault 47	The water pressure switch is not connected or is faulty
Gas Pressure	Fault 76	Gas Pressure Low (pressure switch circuit open)
Trap fault	Fault 77	The trap probe detects an excessive pressure
	Fault 80	Ret. temp. > Flow temp.
	Fault 81	Sensor temperature difference test in progress. A negative outcome will generate Fault 15.
	Fault 82	The body probe is in short circuit or detected a body temperature outside of the allowed range (probe short circuit)
	Fault 83	The body probe is interrupted or detected a temperature outside of the allowed range (probe circuit open)
	Fault 84	Body high temperature (T body > T flow+10°C)
	Fault 89	Programming incongruence (e.g., Max<Min)
	Fault 91	Cascade probe short circuit
	Fault 92	Cascade probe circuit open
	Fault 93	External probe short circuit
	Fault 94	Display board fault
	Fault 95	Cascade probe generic fault
	Fault 96	External probe circuit open
	Fault 97	Wrong cascade matching
	Fault 98	Boiler Bus connection fault
	Fault 99	Internal boiler bus fault

FUNCTIONAL CHECKS - ADJUSTMENT AFTER GAS CHANGE

For the gas change procedure see the relevant section on page 56.

To carry out functional checks and/or adjustment after a gas change, proceed as follows:

- Enable the MANUAL TEST function and press the key to increase output to 100% (see section "MANUAL TEST FUNCTION" on page 57). This brings the thermal unit to work at its **Maximum Gas Flow Rate**.
- The display will show the fan rpm at maximum heat input. Check that this value corresponds to the one indicated in the "TECHNICAL SPECIFICATIONS" table.
- Measure the gas flow rate taking into account the corrective factors (if any).
- Measure CO2 and CO values with the aid of an analyser.

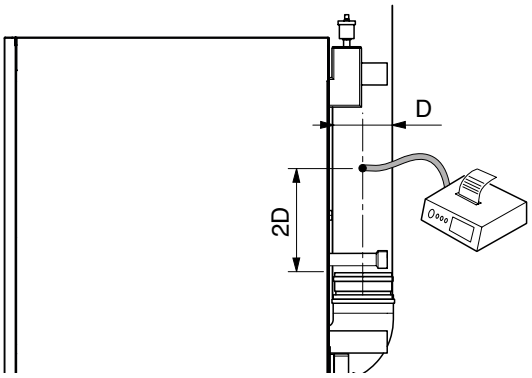

The opening for drawing the flue gas samples to be tested must be on the straight section of the flue gas system duct, located at least 2 diameters away from the device outlet (refer to the Prevailing Standards).

Compare the measured values with the values given in the table below, taking into account a ± 5% tolerance.

DESCRIPTION		MAUI KR 115-280					
		115	150	200	240	280	
Max. gas consumption	G20	11.96	15.87	21.16	24.87	29.10	m^3/h
	G31	8.78	11.66	15.54	18.26	21.37	kg/h
Min. gas consumption	G20	2.22	3.17	3.76	4.50	5.24	m^3/h
	G31	1.63	2.33	2.76	3.30	3.85	kg/h
Max/min CO_2 (average values)	G20	9.3/9.1					%
Max/min CO_2 (average values)	G31	10.6/10.3					%
CO		25	30	35	30	28	ppm

In case they do not match, gradually turn the MAX gas setting screw located on the gas valve until correct combustion values can be detected on the analyser.

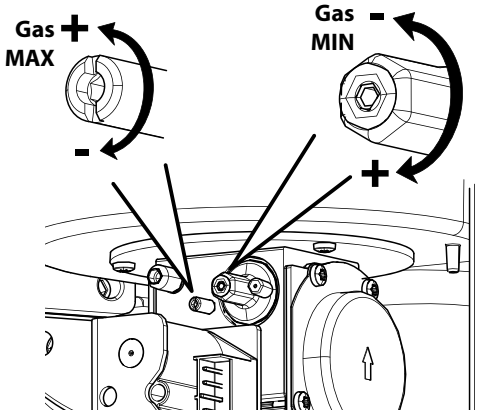

MAUI 115 / 150 gas valve

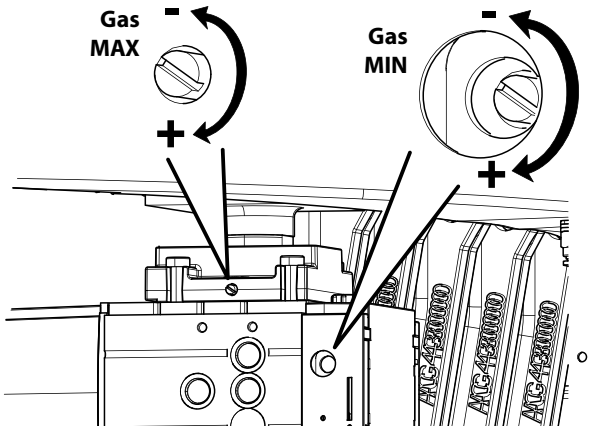

MAUI KR 200-280 gas valve

- Press the key to decrease heat output to 0% (see section "MANUAL TEST FUNCTION" on page 47). This brings the thermal unit to work at its **Minimum Gas Flow Rate**.
- The display will show the fan rpm at minimum heat input. Check that this value corresponds to the one indicated in the "TECHNICAL SPECIFICATIONS" table.
- Measure the gas flow rate taking into account the corrective factors (if any).
- Measure CO_2 and CO values with the aid of an analyser.

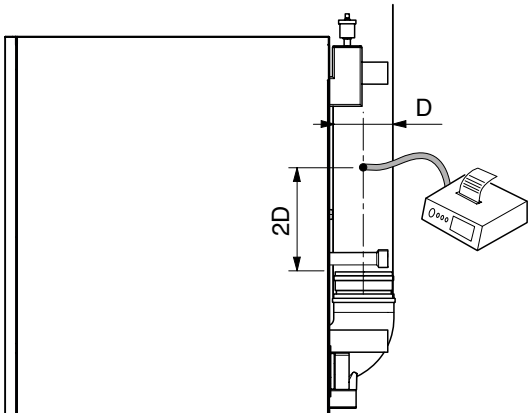

Compare the measured values with the values given in the table on the previous page.
In case they do not match, gradually turn the MIN gas setting screw located on the gas valve until correct combustion values can be detected on the analyser.

Press the **ok** key to disable the MANUAL TEST function.

If necessary, carry out the setting of both maximum and minimum values again.

⚠ WARNINGS

- In case the setting values are unreachable, make sure that:
  - the flue gas vent ducts and the combustion air ducts are not obstructed;
  - the gas pressure is not lower than 18 mbar (G20) and 25 mbar (G31);
  - the fan rpm is correct see page 47.

EXTERNAL PROBE AND CLIMATE CURVE

When operation requires the use of the external probe (sliding temperature), the MAXIMUM and MINIMUM FLOW temperatures must be set, as well as the EXTERNAL temperature range, so as to allow the device to determine the climate curve that corresponds to the entered settings.

Follow the procedure below:
- Access the Technical menu (see page 34)
- Access "1. CH" and proceed to line "2. CH temperature" (see page 35)
- Press ok and check the current values
- If they need editing, select and access the line that needs editing
- Edit the value and confirm by pressing ok.

- Press
- Select "3. External probe parameters"
- Press ok and check the current values
- If they need editing, select and access the line that needs editing
- Edit the value and confirm by pressing ok.

IMPORTANT
After setting/establishing the desired values it is recommended to access lines 4. External temperature setpoint table and 5. Heating curve, to view the device operating mode and, if necessary, amend any values (it may be necessary to wait one minute, so as to allow the system to update the data).

- Press until returning to the first line
- Select "6. Request type"
- Press ok
- Select "External probe" and confirm by pressing ok.

The external probe temperature value can always be viewed on the display start screen.

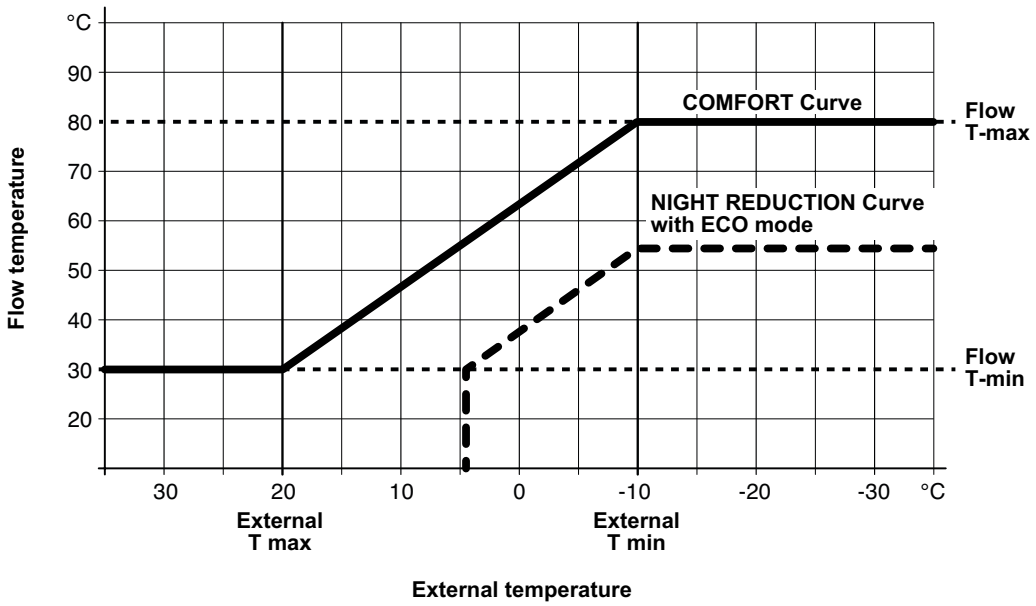

0..10V INPUT CHECK

IMPORTANT PREMISES
When an external regulator with 0÷10 V signal for heat output control is used, the system must feature, on device flow, an additional temperature probe connected to the external regulator.
IF it is not present, this must be installed.

DEVICE SETTINGS
With these settings, the device heat output / temperature is managed directly via the 0÷10 V signal, as follows:
- Access the Technical menu (see page 34)
- Access "1. CH" and proceed to line "6. Request type" (see page 35)
- Then select **"0-10 V [%] signal" (request for heat output control)** or **"0-10 V [SP] signal" (request for temperature control)**.

A)	with increasing voltage	voltage < 2 V	---> OFF
		2 V ≤ voltage ≤ 10 V	---> linear variation of Heat output or Temperature
B)	with decreasingvoltage	2 V ≤ voltage ≤ 10 V	---> linear variation of Heat output or Temperature
		1 V ≤ voltage < 2 V	---> Minimum heat output or Minimum Temperature
		voltage < 1 V	---> OFF

In both modes the climate control is managed by the external regulator, therefore, at least one of the following conditions must be met to prevent any overlaying of time slots:
- Timer disabled
- Timer enabled but in "OFF" mode

To change the functions at level "3.Timer Setting":
- Access the Engineer Menu (see page 34)
- Select "5. USER SETTINGS" (see page 37)
- Access line "1.CH" and move to line "3.Timer Setting"

IMPORTANT
The heating function (CH) must always be active (not disabled).

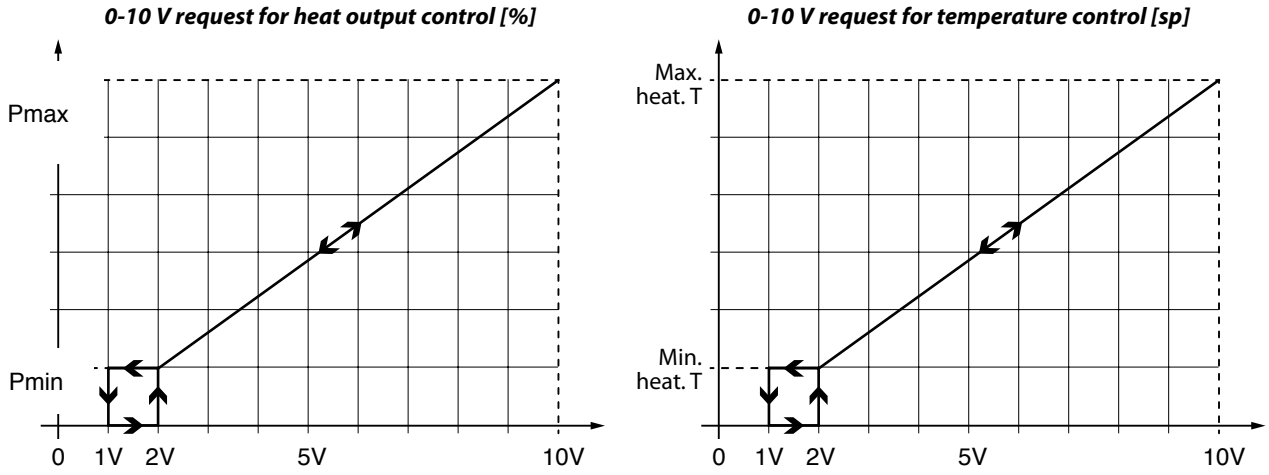

INSTALLATION

REQUEST TYPE

According to the device selection (Heating parameter 1.6), the following table shows the priority based on the ambient thermostat and Timer setting conditions.

		Heating		
		External probe	**Ambient thermostat**	**0-10 V (heat output or temperature)**
TA contact closed	**Timer ENABLED**	The thermal unit follows the time setting, respecting the ON, ECO and OFF phases. The temperature is regulated according to the external Temperature	The thermal unit follows the time setting, respecting the ON, ECO and OFF phases: If = OFF => Request disabled, thermal unit in stand-by; If = ON => Request enabled, setpoint fixed at Tmax* set; If = ECO => Request enabled, setpoint fixed at the temperature corresponding to the ECO mode	Request enabled, setpoint depending on the 0-10 V signal
	Timer DISABLED	Request enabled, setpoint corresponding to the ON mode (comfort). The temperature is regulated according to the external Temperature	Request enabled, setpoint fixed at Tmax* set	
TA contact open	**Timer ENABLED**	Request disabled, thermal unit in stand-by	Request disabled, thermal unit in stand-by	Request disabled, thermal unit in stand-by
	Timer DISABLED	Request enabled, setpoint corresponding to the ECO mode. The temperature is regulated according to the external Temperature		

(*) Tmax = Maximum set temperature (see parameter 1.2.2 Engineer menu)

⚠ This operating mode is valid both for TA in high voltage and in low voltage (see page 47).

TIMER SETTING

IT is possible to program specific time slots (periods of time) during which the thermal unit has to work if there is a heat request, and time slots during which the thermal unit remains off or in ECO operating mode in case an external probe is present.
The maximum number of programmable time slots is 6 within 24 hours. Each time slot must be identified by a start time (ON) and an end time (OFF). The minimum programming time range is half an hour.

Key to press	Description	Display
menu	to view the MENU screen	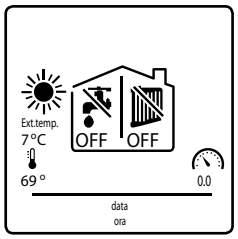 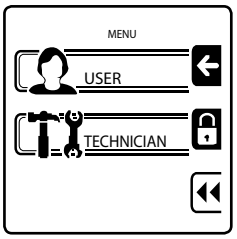
	to enter the USER MENU	
ok	to select "1. CH"	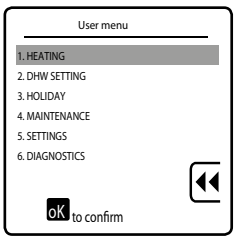 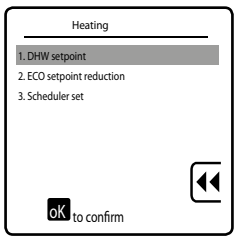
	or	
▼ ok	to select "2. DOMESTIC HOT WATER"	
	NOTE: the timer setting procedure is the same for both functions.	
▼ 2 TIMES	to select "3. Timer setting"	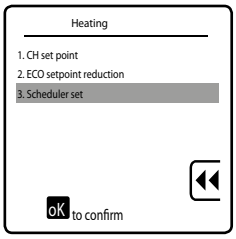 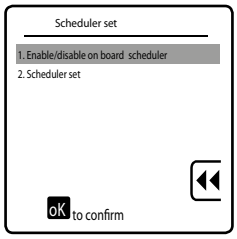
ok	to confirm and access the selected line	
▲ ▼	**to select Enabled or Disabled**	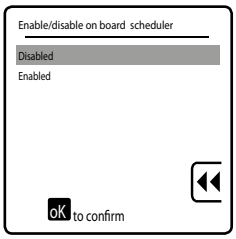 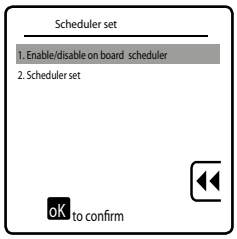
ok	to confirm your selection and go back to line "1. Enable/ Disable local timer"	
	WARNING: if DISABLED is selected, the timer programming is saved but not enabled.	
▼	to select "3. Timer setting"	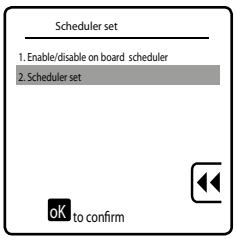 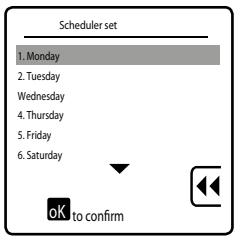
ok	to confirm and access the selected line	

INSTALLATION

Key to press	Description	Display
▲ ▼	to select an individual day or a group of days of the week	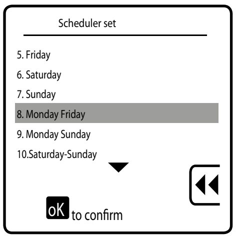 Scheduler set 5. Friday 6. Saturday 7. Sunday 8. Monday Friday 9. Monday Sunday 10.Saturday-Sunday oK to confirm 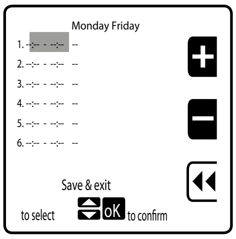 Monday Friday 1. --:-- - --:-- -- 2. --:-- - --:-- -- 3. --:-- - --:-- -- 4. --:-- - --:-- -- 5. --:-- - --:-- -- 6. --:-- - --:-- -- Save & exit to select oK to confirm
ok	to confirm and access the selected line	
+ OR −	to select the first time slot "start" time	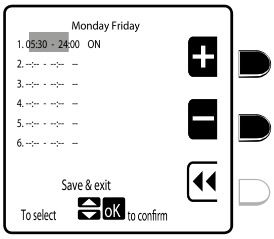 Monday Friday 1. 05:30 - 24:00 ON 2. --:-- - --:-- -- 3. --:-- - --:-- -- 4. --:-- - --:-- -- 5. --:-- - --:-- -- 6. --:-- - --:-- -- Save & exit To select oK to confirm 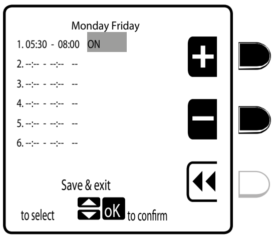 Monday Friday 1. 05:30 - 08:00 ON 2. --:-- - --:-- -- 3. --:-- - --:-- -- 4. --:-- - --:-- -- 5. --:-- - --:-- -- 6. --:-- - --:-- -- Save & exit to select oK to confirm
▼	to select the first time slot "end" time	
▼	to select the first time slot operating mode among ON, ECO or -- (boiler OFF)	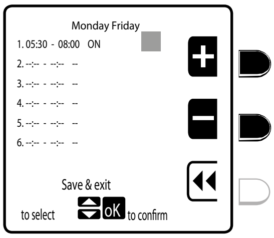 Monday Friday 1. 05:30 - 08:00 ON 2. --:-- - --:-- -- 3. --:-- - --:-- -- 4. --:-- - --:-- -- 5. --:-- - --:-- -- 6. --:-- - --:-- -- Save & exit to select oK to confirm 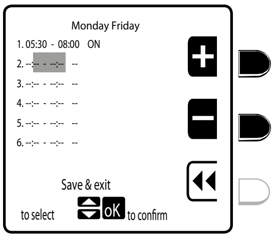 Monday Friday 1. 05:30 - 08:00 ON 2. --:-- - --:-- -- 3. --:-- - --:-- -- 4. --:-- - --:-- -- 5. --:-- - --:-- -- 6. --:-- - --:-- -- Save & exit to select oK to confirm
▼	to move to the second time slot. Follow the instructions provided for the first time slot.	
	NOTE: the time setting procedure is the same for all time slots.	
▼	to select "Save and quit" or "Copy Day" (if you wish to copy the entered settings to the following day)	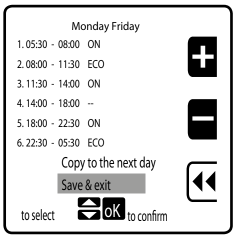 Monday Friday 1. 05:30 - 08:00 ON 2. 08:00 - 11:30 ECO 3. 11:30 - 14:00 ON 4. 14:00 - 18:00 -- 5. 18:00 - 22:30 ON 6. 22:30 - 05:30 ECO Copy to the next day Save & exit to select oK to confirm 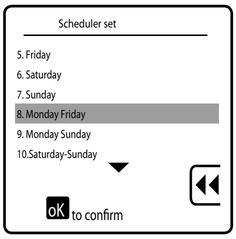 Scheduler set 5. Friday 6. Saturday 7. Sunday 8. Monday Friday 9. Monday Sunday 10.Saturday-Sunday oK to confirm
ok	to save the entered settings and return to the line for the individual day or group of days previously selected	
▲ ▼	to select the remaining day or days and set the desired time slots	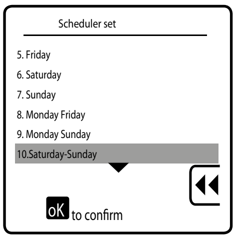 Scheduler set 5. Friday 6. Saturday 7. Sunday 8. Monday Friday 9. Monday Sunday 10.Saturday-Sunday oK to confirm 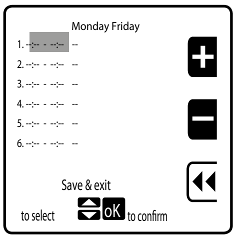 Monday Friday 1. --:-- - --:-- -- 2. --:-- - --:-- -- 3. --:-- - --:-- -- 4. --:-- - --:-- -- 5. --:-- - --:-- -- 6. --:-- - --:-- -- Save & exit to select oK to confirm
ok	to confirm and access the selected line.	
	NOTE: the time setting procedure is the same for all time slots.	

TEMPORARY SWITCHING OFF AND HOLIDAY TIME PROGRAMMING

This function allows setting the thermal unit operation to reduced capacity during temporary absences, week-ends, holidays and restoring full capacity automatically after a set period of time.

⚠ WARNINGS

- During any holiday periods the device's gas and power supplies must be on to ensure correct operation.

The CH and/or DHW production delivery temperatures must be set by following the procedure below:

Key to press	Description	Display
menu	to view the MENU screen	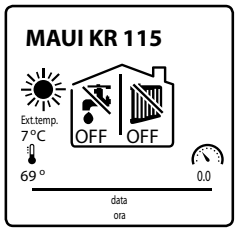
	to enter the USER MENU	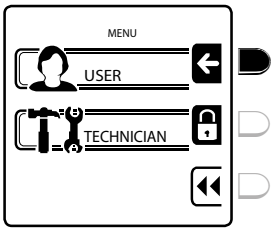
▼ 2 TIMES	to select "3. HOLIDAY"	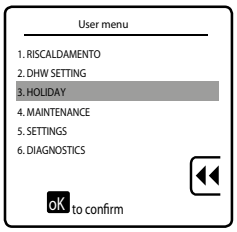
ok	to confirm and access the selected line	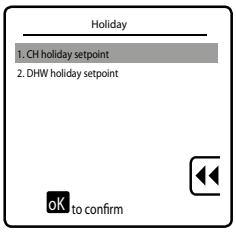
ok	to select "1. CH temperature"	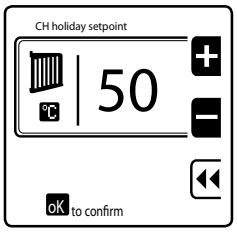
+ OR −	to set the desired value	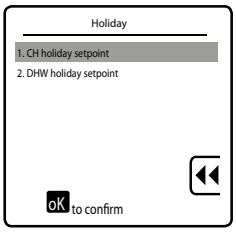
ok	to confirm set value and go back to line "1. CH temperature"	

INSTALLATION

(*) If water heater is equipped with thermostat, do not set a too-low value as this would generate a continuous DHW request.

Key to press	Description	Display
▼	to select "2. DHW temperature"	
ok	to confirm and access the selected line	
+ OR −	to set the desired value (for water heaters with probe only) (*)	
ok	to confirm set value and go back to line "2. DHW temperature"	
esc	to return to start screen	
	to view the "Holiday start" date	
+ OR −	to set holiday start day	
▼	to select the month	
+ OR −	to set the month	
▼	to select the year	
+ OR −	to set the year	
ok	to confirm set values and enter the "Holiday end" screen. NOTE: for holiday end day, month and year settings, follow the "Holiday start" procedure.	

MAINTENANCE AND CLEANING

Routine maintenance is compulsory by Law and is essential to ensure safety, efficiency and durability of the device.
The cleaning of the device and the removal of the combustion deposits from the exchange surfaces should be carried out **at least once a year.** IT is an essential condition to reduce consumption and emissions and to maintain the performance of the device.

Prior to starting maintenance and/or cleaning operations:
- Turn the system (IG) and the device (Ip) main switches to "OFF"
- Close the gas shut-off cocks.

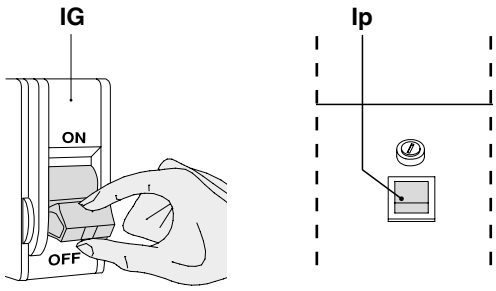

EXTERNAL CLEANING

Use a cloth dampened in water and soap to clean the casing. In case of tough stains, dampen the cloth in a 50% mixture of water and denatured alcohol or use specific products.
After cleaning, carefully dry the casing.

⚠ WARNINGS

- Use ONLY original spare parts when replacing components.
- Do not use abrasive products, petrol or trichlorethene.

INTERNAL CLEANING OF BOILER BODY AND BURNER

For a correct device operation, it is necessary to carry out a routine cleaning of burner and flue gas lines inside the exchanger. It is essential to thoroughly remove the dirt mechanically from the exchanger in order to prevent calcifications during the life of the boiler. If necessary, remove the residues chemically, using products suitable for aluminium, which is the material the boiler is made of.
After cleaning, remove/extract the residues from the condensate collection tank, by opening the inspection door and clean the condensate trap as well. **IF IN DOUBT, CONTACT FONDITAL.**

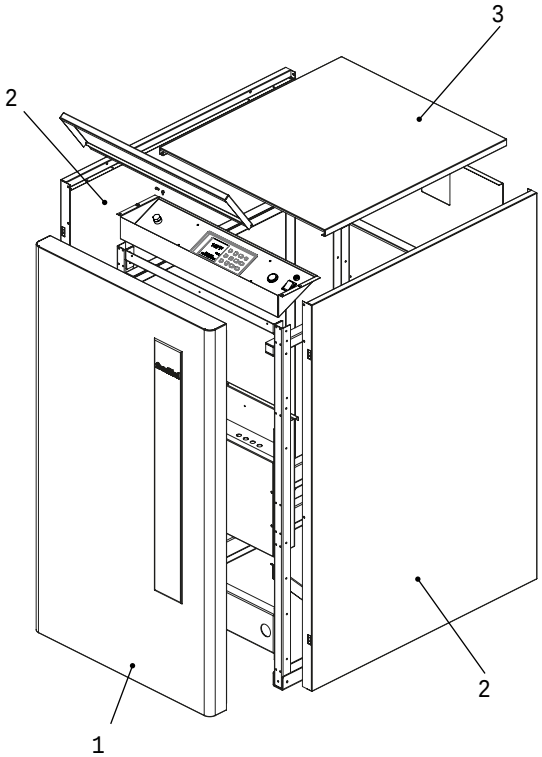

Removing the panelling

- Open and remove the front (1), side (2) and top (3) panels.

MAINTENANCE

Disassembling and cleaning the burner

In the event that the device performance shows the need for cleaning the burner head:

- Remove the two fan connectors and the gas valve connector
- Loosen the three-component joint (4) of the gas line
- Loosen the four retaining screws (5) and remove the burner-fan-gas valve (6) assembly from the boiler, having care not to damage the seal (7)
- Remove the combustion head (8) and clean it with the utmost care using compressed air.

After cleaning, refit all the components proceeding in reverse order, and fit new seals where necessary.

IMPORTANT
IT is compulsory to carry out a sealing test of the gas line, as set forth in the Standards.

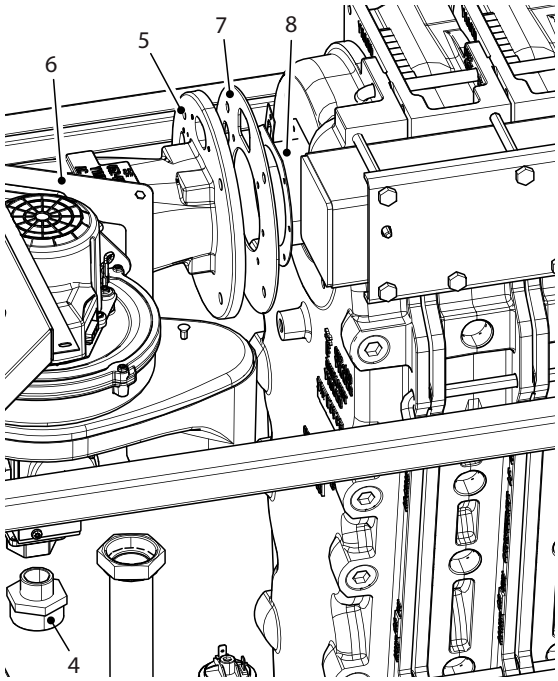

MAINTENANCE

Disassembling and cleaning the exchanger

- Loosen the nuts (9) and remove the inspection doors (10) as well as their seals (11)
- Use a tube-brush, or any other suitable tool, to clean the exchanger lines. A tool (metal blade 12) suitable for the mechanical cleaning of the flue gas lines can be supplied by Fondital as an optional
- After cleaning, check the condition of the seals (6) and replace them if necessary.

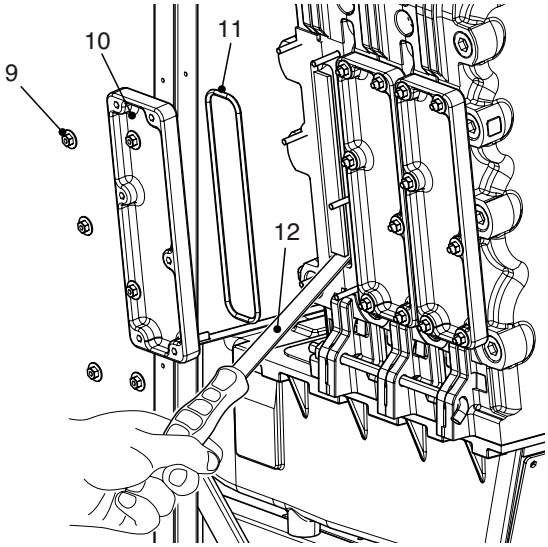

Disassembling and cleaning the trap and the condensate collector tank

- Loosen nuts (13) and remove the inspection door (14). Check and clean the condensate collector tank. After cleaning, refit the door and check it for tightness. Replace the seal if necessary
- Loosen the ring nuts (15) and (16) and remove the trap, having care not to let condensate flow out
- Loosen the ring nut (17) and thoroughly clean the trap internal parts.

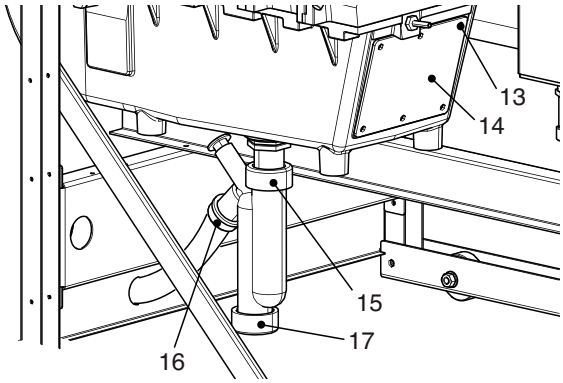

Disassembling and replacing the electrodes

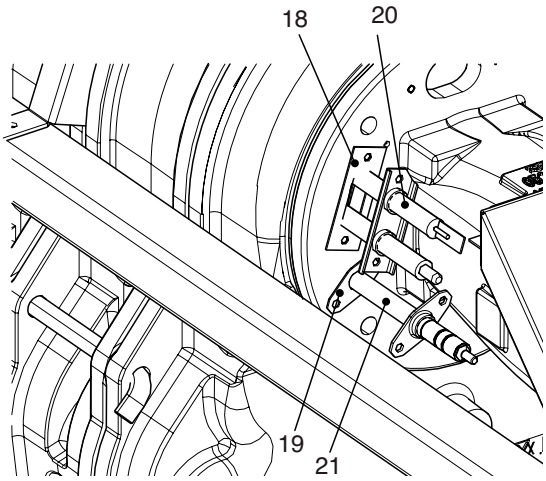

WARNINGS

- **When disassembling the electrodes, pay the utmost attention not to damage the seals (18) and (19). Replace them if damaged.**

- Loosen the retaining screws of the electrode unit (20), slide it out and check that it is in a good condition. **IT is advisable to replace it considering the frequent ignitions of the device.**
- Loosen the retaining screws of the probe (21), remove it and check that it is in a good condition. Replace it if necessary.

OPERATING FAILURES

Any failures or faults of the device are shown on the display as indicated in the table on page 59.

However, other faults of the device/system assembly can occur, as given below.

Fault	Cause	Solution
Gas smell	- Gas supply circuit	- Make sure that the connections are tight and that the pressure measurement points are closed
Smell of unburnt products	- Flue gas circuit	- Check for: - Tightness of connections - Absence of obstructions - Combustion quality
Irregular combustion	- Pressure of supply gas	- Check setting
	- Burner and/or exchanger fouled	- Check conditions
	- Intake and/or vent ducts fouled	- Check conditions
	- Incorrect fan rpm	- Check fan rpm (see page 47)
Ignition delays with pulses to the burner	- Adjust ignition power more accurately	- Change valve gas setting
The generator fails to reach the temperature	- Generator body fouled	- Clean the combustion chamber
	- Insufficient burner flow rate	- Check burner setting

Fault	Cause	Solution
The generator temperature is correct but the heating systems are cold	- Air in the system	- Bleed system
	- System pump	- Unseize pump - Replace pump
Frequent triggering of system safety valve	- System safety valve	- Check calibration or efficiency
	- System pressure	- Check filling pressure - Check pressure reducer - Check filling valve
	- System expansion tank	- Check efficiency
System pump(s) not working	- Pump seized, electrical connections	- Check pump and connections
	- Ambient thermostat	- Check ambient thermostat and connections
Water heater pump not working	- Pump seized, electrical connections	- Check pump - Check electrical connection between the pump and the control panel
	- Water heater thermostat	- Check thermostat operation and position

CONTROL PANEL

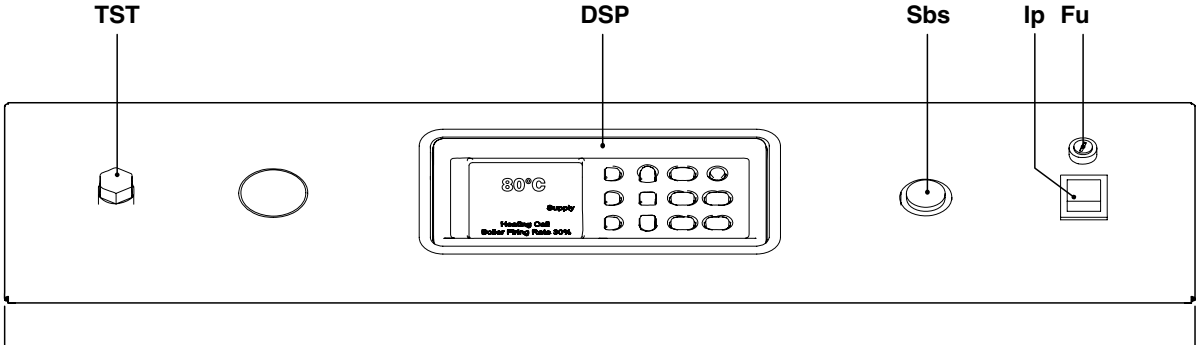

Sbs Warning light - shutdown due to activation of safety devices
DSP User interface with display
Ip Main switch with light signalling
Fu Main fuse (10A)
TST Manual reset safety thermostat

DSP

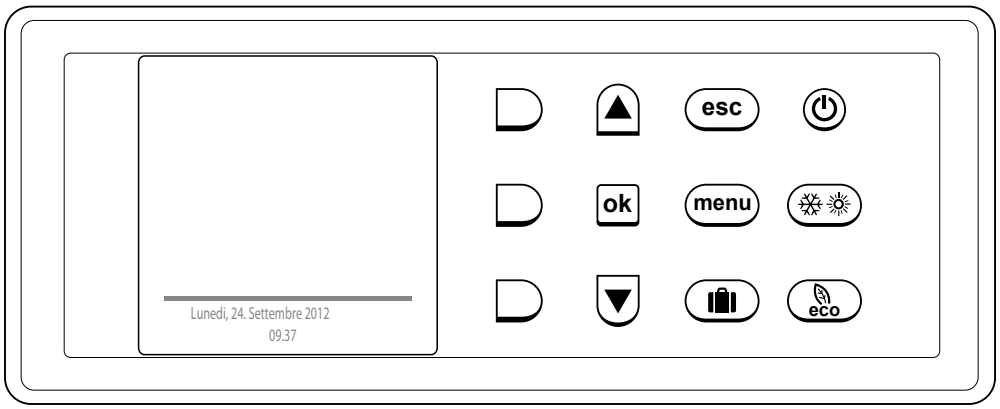

DISPLAY SYMBOL DESCRIPTION

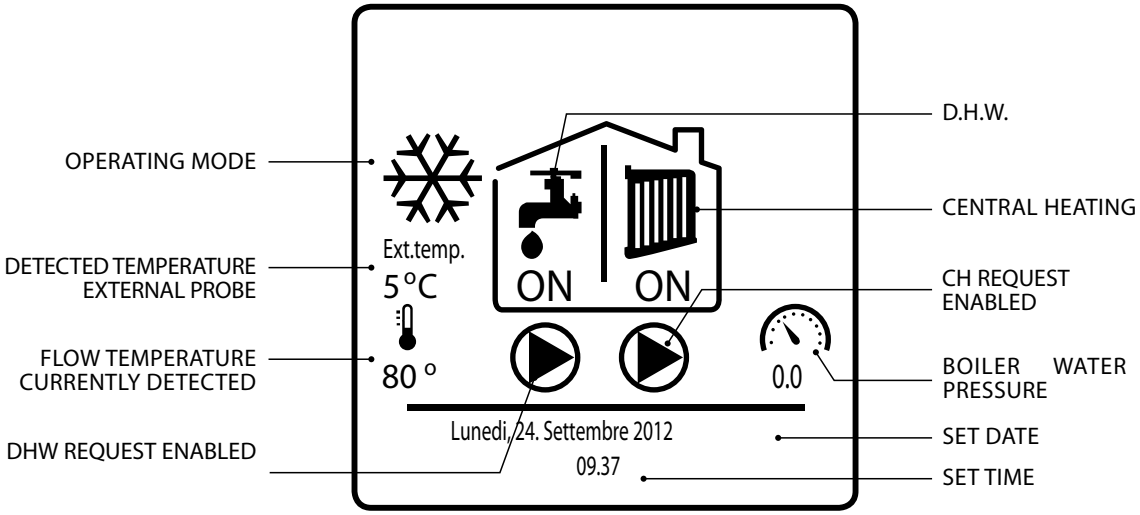

START SCREEN

Key	Function description	Display
	ON/STAND-BY **STAND-BY:** Stops the device, blocking the device keys. **ON:** Starts the device, unblocking the device keys.	 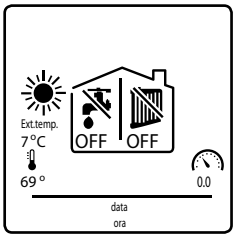
	OPERATING MODE **SUMMER:** DHW production only **WINTER:** CH only or CH and DHW **NONE:** neither CH, nor DHW Antifreeze or "Manual test" active	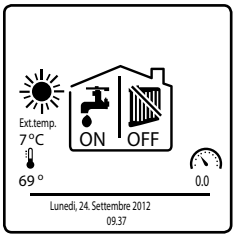 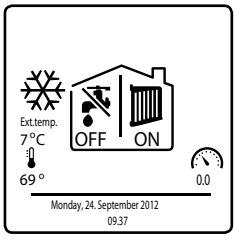 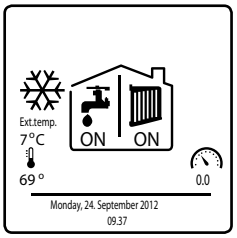 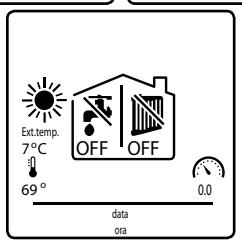
	ECO - Manual Reduces by a set value the DHW and CH water delivery temperature (reduced operation)	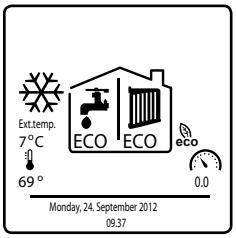
	ESC Interrupts the current activity and returns to the start screen	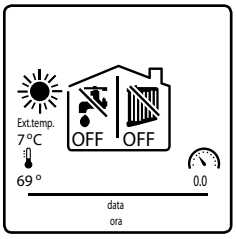
	MENU Displays the menu selection page (USER or TECHNICIAN)	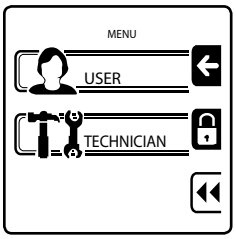

Key	Function description	Display
	HOLIDAY Sets the holiday start and end dates and the DHW and CH water delivery temperature values for this interval	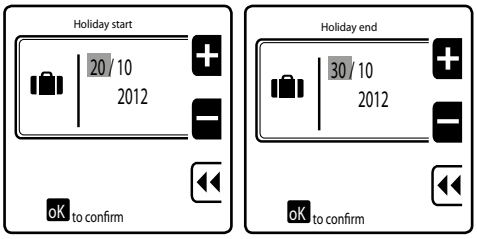
	UP Scrolls up screen lines **DOWN** Scrolls down screen lines Hold the keys for fast scrolling.	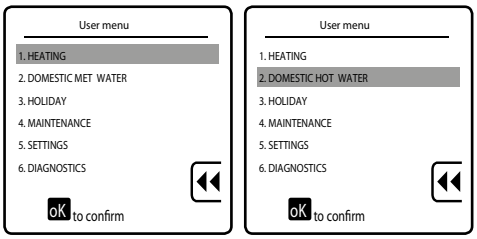
	OK Allows: - accessing the selected menu or sub-menu line - confirming the new value that was entered	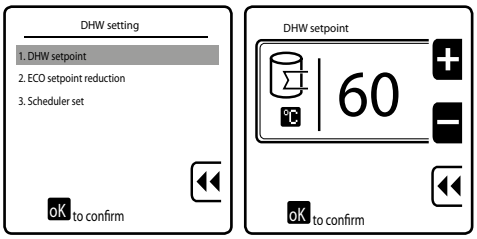
	RED (top) Allows: - accessing the USER menu - increasing the value to be edited Hold the key for fast scrolling.	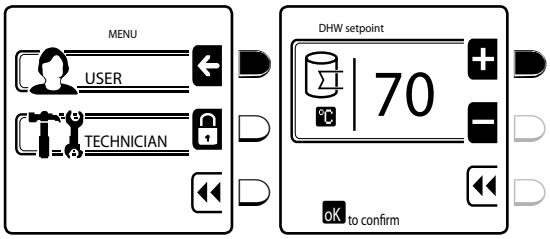
	RED (middle) Allows: - accessing the Technical menu - decreasing the value to be edited Hold the key for fast scrolling.	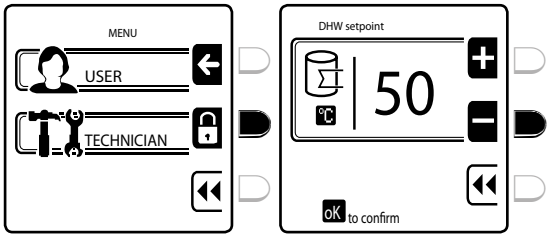
	RED (bottom) Returns to the selected line without saving/ storing the edited value Hold the key for fast scrolling.	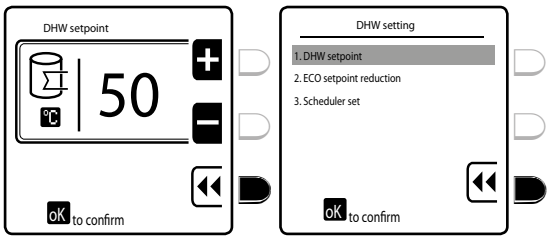

IGNITION AND SWITCHING OFF

Commissioning of the device must be carried out by the Technical Service personnel; after that the device can run automatically. The person in charge of the system can turn the device on and off as follows:

- Power the thermal unit by turning the system (IG) and the device (Ip) main switches to "ON".

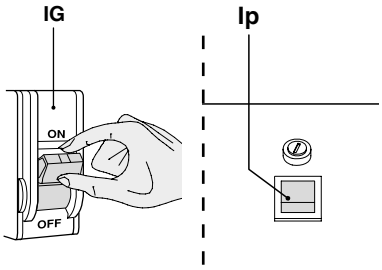

- The display will show the stand-by screen.
- Press ⏻ to enable device keypad.

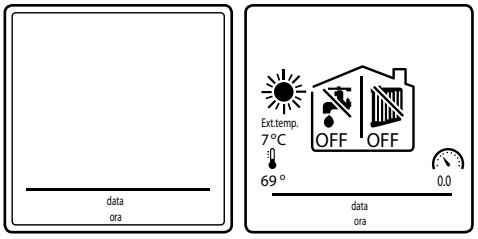

MENU NAVIGATION AND STRUCTURE

User menu navigation and STRUCTURE

The device default factory configuration is STAND-BY.
To navigate through menu screens use the keys as indicated in the diagram below.

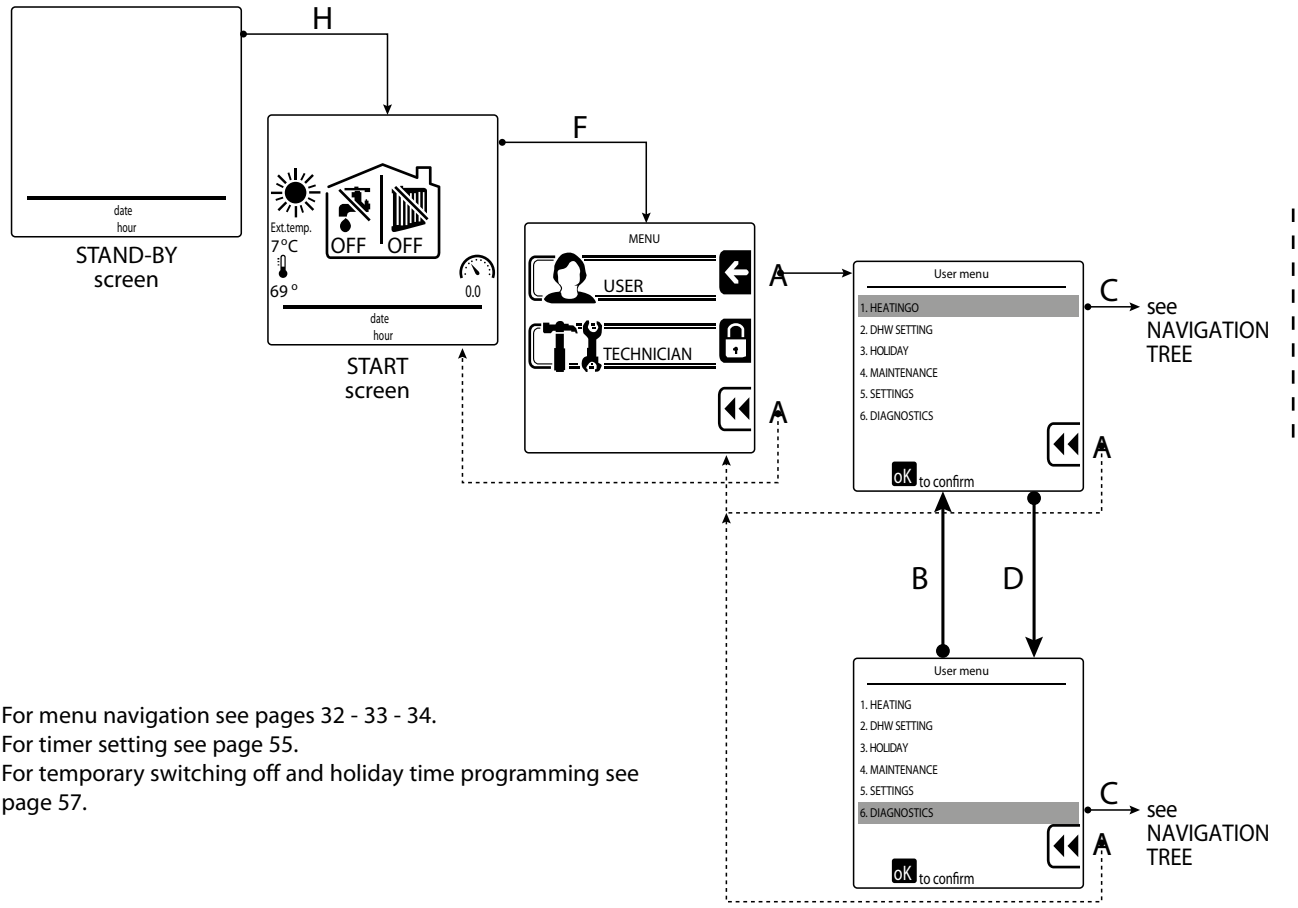

For menu navigation see pages 32 - 33 - 34.
For timer setting see page 55.
For temporary switching off and holiday time programming see page 57.

MAINTENANCE

We wish to point out that the PERSON IN CHARGE OF THE THERMAL SYSTEM IS COMPELLED by Law to have the ROUTINE MAINTENANCE and the MEASURING OF THE COMBUSTION EFFICIENCY carried out. These operations should be carried out only by QUALIFIED PERSONNEL

The Technical Service is available to perform this important law obligation.

ROUTINE MAINTENANCE means:
- Increased safety
- Lower operating costs
- Longer boiler life
- The assurance not to incur high fines in the event of inspections.

ROUTINE CLEANING

The cleaning of the device and the removal of the combustion deposits from the exchange surfaces should be carried out **at least once a year** by qualified personnel.
It is an essential condition to reduce consumption and emissions and to maintain the performance and reliability of the device over time.

Prior to starting the cleaning operations:

- Turn the system (IG) and the device (Ip) main switches to "OFF"
- Close the gas shut-off cocks.

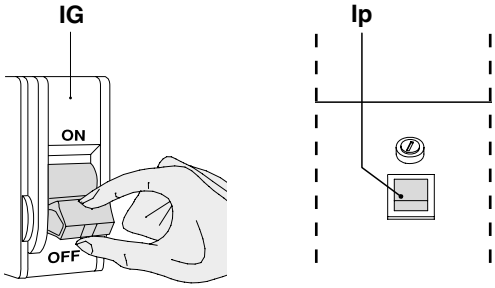

EXTERNAL CLEANING
Use a cloth dampened in water and soap to clean the casing. In case of tough stains, dampen the cloth in a 50% mixture of water and denatured alcohol or use specific products.
After cleaning, carefully dry the casing.

WARNINGS

- Do not use abrasive products, petrol or trichlorethene.

0LIBBCEN00

Fondital S.p.A.

25079 VOBARNO (Brescia) Italy - Via Cerreto, 40
Tel. +39 0365/878.31 - Fax +39 0365/878.304
e mail: info@fondital.it - www.fondital.com

Uff. Pubblicità Fondital IST 03 C 640 - 01 Ottobre 2014 (10/2014)